Gio

SOFA

Generated: 24/11/2026



Within the HESSENTIA world, the angular version of Gio sofa reinterprets the sinuous, decisive shapes of the original design through an unconventional geometry. The structure abandons traditional linearity and develops the seating in two directions, transforming the shape of the sofa itself into a tool for organizing the living area.

The corner configuration introduces a change in orientation, making the sofa particularly suitable for interiors where the seating can take centre stage. The geometry creates different visual relationships between people and the surrounding space, moving beyond the frontal arrangement typical of a linear sofa.

The soft volumes follow the change in direction of the structure while preserving the formal continuity that defines Gio. The version is available in different sizes and upholstered in leather or fabric, further enhancing comfort and the perception of the seating.

Handmade in Italy, V-shaped Gio interprets the living area through open geometry, sinuous shapes and unconventional orientation, transforming the sofa into an element capable of changing the way the space is experienced.

Dimensions

Generated: 24/11/2026

GIO.2300/ANG
Sofa

250 W x 123 D x 70 H cm

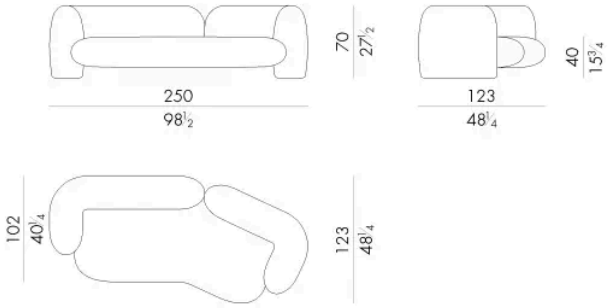

GIO.2400/ANG
Sofa

283 W x 129 D x 70 H cm

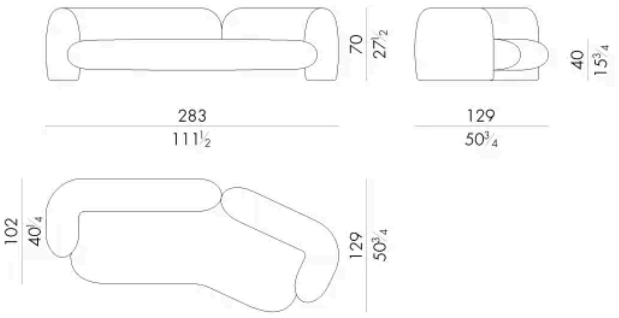

GIO.2500/ANG

Generated: 24/11/2026

Sofa

317 W x 135 D x 70 H cm

