Synthesis

RUG

Generated: 29/11/2026



Synthesis is a contemporary rug made entirely by hand using the hand-tufting technique. It gradually takes shape through the work of HESSENTIA's skilled artisans, making each piece an expression of the sensitivity and precision of their craftsmanship.

Tufting allows a rug to be built yarn by yarn, transforming individual threads into a continuous yet non-repetitive surface that retains its individual character. The subtle variations created by the handcrafted process become part of the product's identity.

Texture and density give the surface depth and change the way the rug is perceived within the space. The surface responds subtly to light, revealing variations and transitions that make it less uniform.

In the living area, Synthesis becomes the connecting element that brings together seating, coffee tables and accessories, helping to balance the proportions of the ambience.

The possibility to customise the dimensions and yarn colours also allows the rug to be suitable for different interior arrangements, while preserving the distinctive character of its handcrafted texture.

Synthesis expresses HESSENTIA's approach to textile design through artisanal tufting, material and customisation, transforming the rug into a main element that brings continuity and depth to the space.

HESSENTIA can customise this item to meet the requirements of your project. Some limitations apply.

Dimensions

Generated: 29/11/2026

SYNTHESIS.420145/R
Rug

420 W x 145 D cm

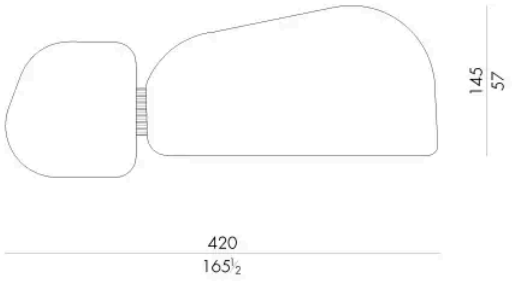

SYNTHESIS.400320/G
Rug

400 W x 320 D cm

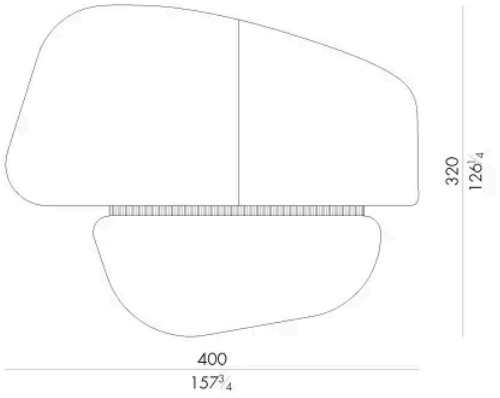

SYNTHESIS.475360/C
Rug

475 W x 360 D cm

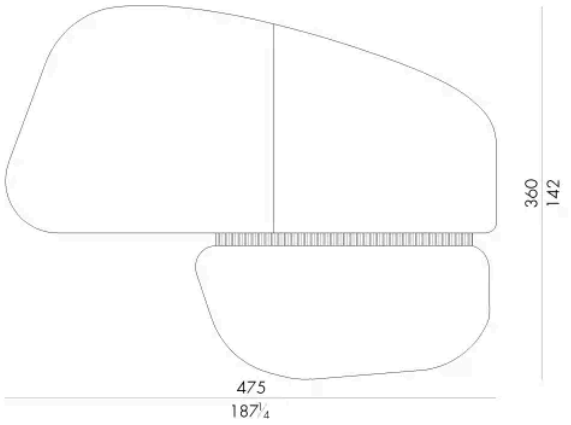

SYNTHESIS.475360/V
Rug

475 W x 360 D cm

