Meraki

TABLE

Generated: 25/11/2026



Meraki is a HESSENTIA table born from the meeting of natural material and creative design. The marble top carries the quiet strength of stone, while fiberglass legs introduce a fluid presence shaped through artistic handcraftsmanship. Available in rectangular and round versions, Meraki interprets the table as a place of balance between shape, function and sensitivity to materials.

Fiberglass is enhanced through hand-worked finish that give each piece a unique visual and tactile character. Marble, with its natural veining and distinctive variations, adds depth and character, creating a dialogue between lightness and solidity, movement and stability.

In the rectangular version, Meraki has a more architectural, linear presence; the round version encourages a more fluid interaction between people, gestures and space. Both configurations express HESSENTIA's exploration of fiberglass, fine marbles, handcraftsmanship and contemporary Made in Italy design.

HESSENTIA can customize this piece to suit your project needs. Some limitations apply.

Dimensions

Generated: 25/11/2026

MERAKI.5160
Table

160 W x 160 D x 73 H cm

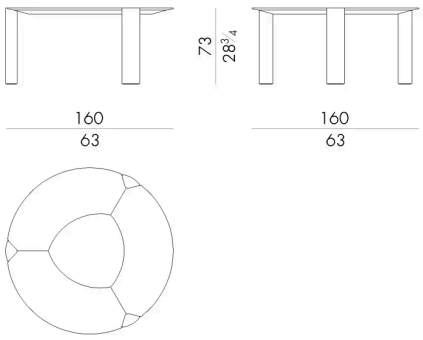

MERAKI.5200
Table

203 W x 203 D x 73 H cm

