Novabed

BED



Within the HESSENTIA world, Novabed with integrated night tables develops Nova collection through a complete composition in which bed, compact storage and lighting are brought together in a single system. The bed belongs to Nova collection and retains its vertical embroidery, parallel stitching and metal details.

The extended headboard projects laterally beyond the bed frame and supports two suspended night tables. The storage elements do not rest directly on the floor, but are integrated through a metal profile with hand-frosted finish that visually lightens the composition.

A LED lighting system is integrated into the upper part of the profile. Light becomes part of the structure and helps define the atmosphere of the sleeping area without requiring separate lamps on the night table tops.

The headboard and bed frame can be upholstered in leather or fabric. Vertical embroidery alternating with parallel stitching shapes the surface and introduces an ordered rhythm, while the metal creates a more precise and luminous contrast.

The integrated night tables establish a direct relationship between function and shape. The compact drawer unit is not simply placed beside the bed, but becomes an integral part of its architecture and follows the same design continuity.

Novabed is particularly suited to spacious bedrooms, suites and contract projects where a coordinated solution is required to reduce the number of independent elements.

Handmade in Italy, Novabed with integrated night tables interprets the sleeping area through tailoring craftsmanship, LED lighting technology and coordinated design.

Dimensions

N O V A B E D . 5 1 5 3 / C
Bed

332 W x 226 D x 120 H cm

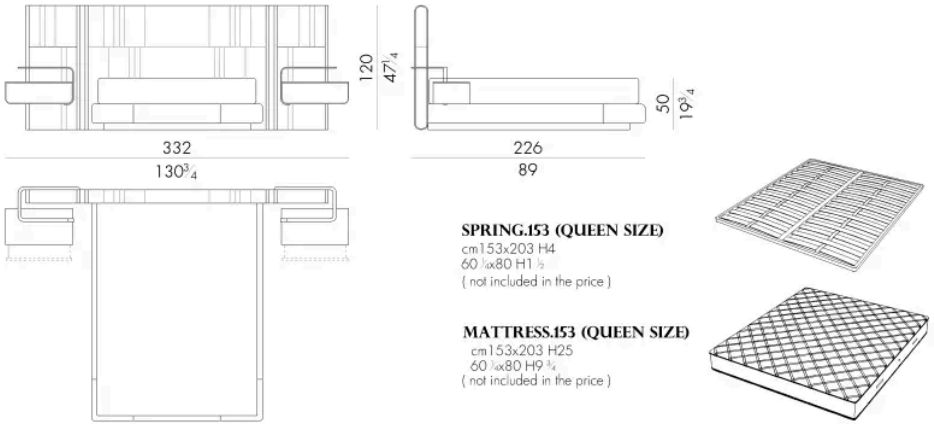

N O V A B E D . 5 1 6 0 / C
Bed

332 W x 223 D x 120 H cm

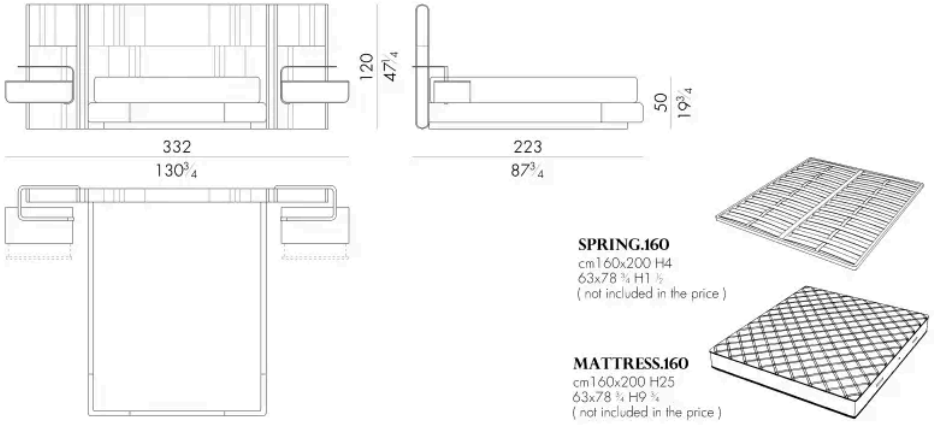

N O V A B E D . 5 1 8 0 / C
Bed

352 W x 223 D x 120 H cm

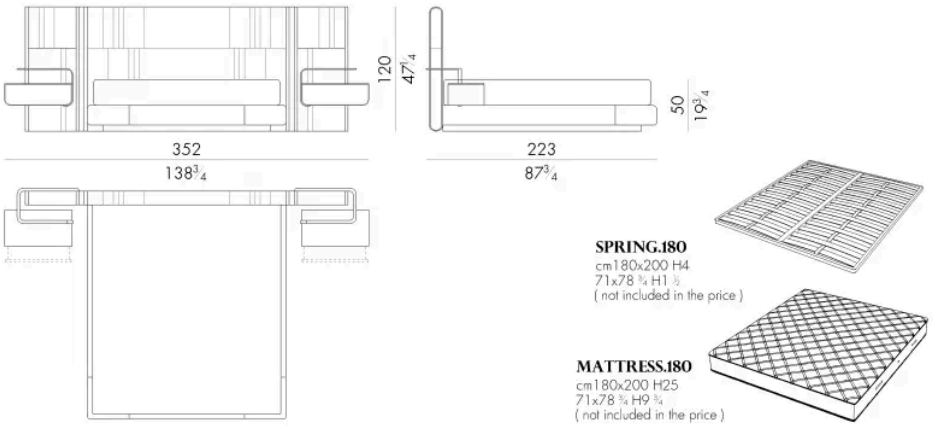

N O V A B E D . 5 1 9 3 / C
Bed

372 W x 226 D x 120 H cm

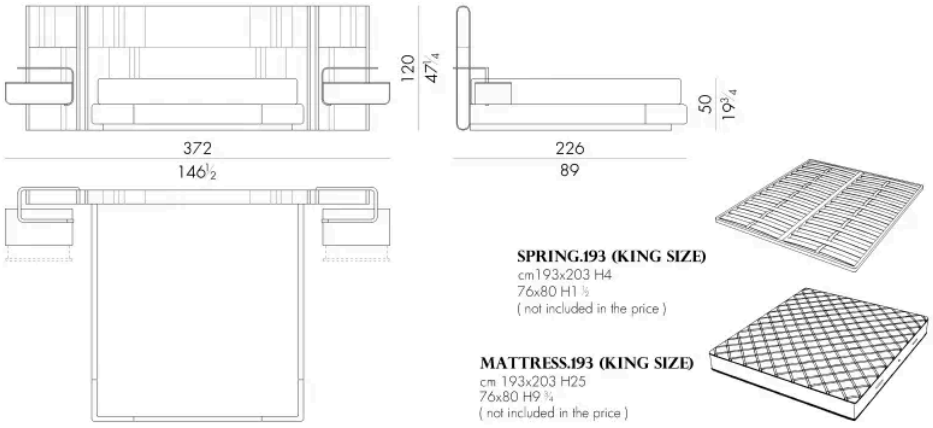

N O V A B E D . 5 2 0 0 / C

Generated: 24/11/2026

Bed

372 W x 223 D x 120 H cm

