Leaf

BED

Generated: 24/11/2026



Leaf is a contemporary upholstered bed defined by a three-dimensional embroidery with wave pattern that continuously wraps around the headboard and bed frame. The bed belongs to Leaf collection, which also includes an armchair and a pouf, all connected by the same exploration of organic shapes and tailoring craftsmanship.

A three-dimensional embroidery runs across the entire upholstery and shapes the perception of the volumes. The flowing lines evoke the veins of a leaf, creating variations of light, depth and texture across the structure.

The workmanship is not a simple decorative detail but becomes part of the bed's formal construction. The rhythm of the embroidery follows the curves of the headboard and continues along the bed frame, creating a continuous composition that remains recognizable from different viewpoints.

Leaf bed is available fully upholstered in leather or quilted fabric. The choice of material changes the perception of the surface: more defined and compact in leather, softer and more tactile in fabric.

Slender metal details support the bed frame and introduce a precise contrast with the continuity of the upholstery. The metal visually lightens the structure and creates a subtle separation between the upholstered volume and the floor.

Its generous proportions and tailoring craftsmanship make it suitable for contemporary bedrooms in which the bed becomes a central element of the interior design. It can be coordinated with the pouf and armchair from the same collection, creating continuity across shapes, upholstery and embroidery.

Handmade in Italy, Leaf expresses the HESSENTIA approach through the relationship between organic shapes, comfort and tailoring precision. It is an upholstered bed in which the three-dimensional embroidery does not simply cover the structure, but defines its identity.

Dimensions

Generated: 24/11/2026

L E A F . 5 1 5 3
Bed

193 W x 246 D x 105 H cm

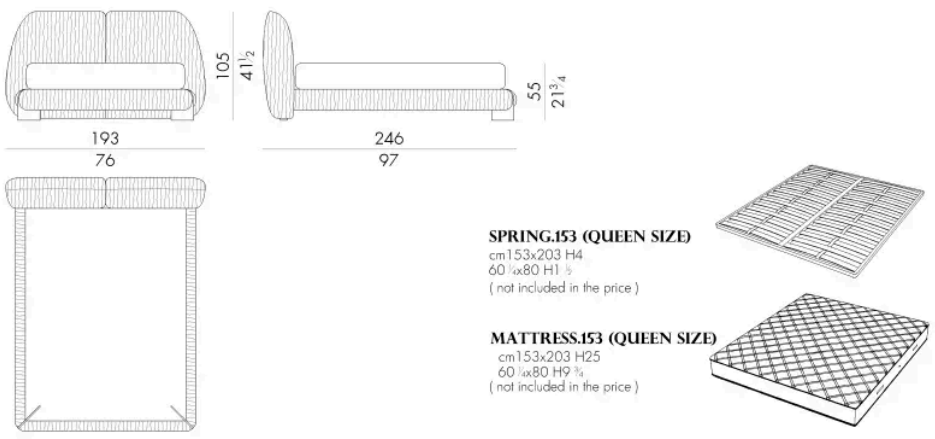

L E A F . 5 1 6 0
Bed

200 W x 243 D x 105 H cm

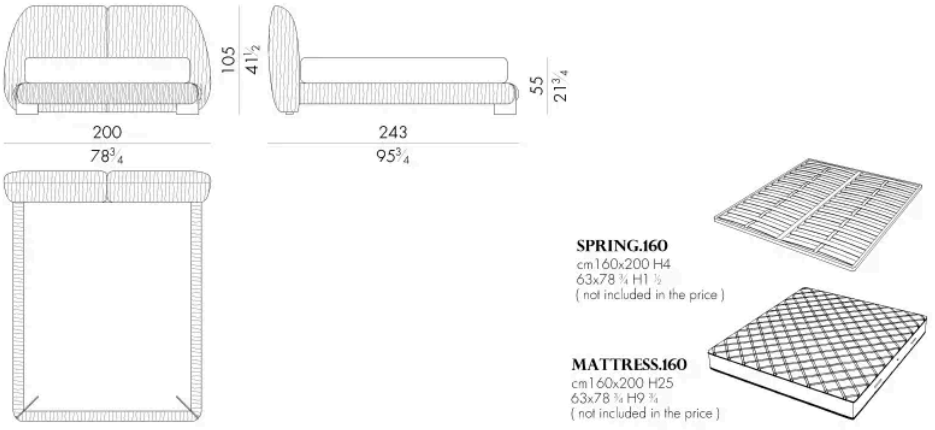

L E A F . 5 1 8 0
Bed

220 W x 243 D x 105 H cm

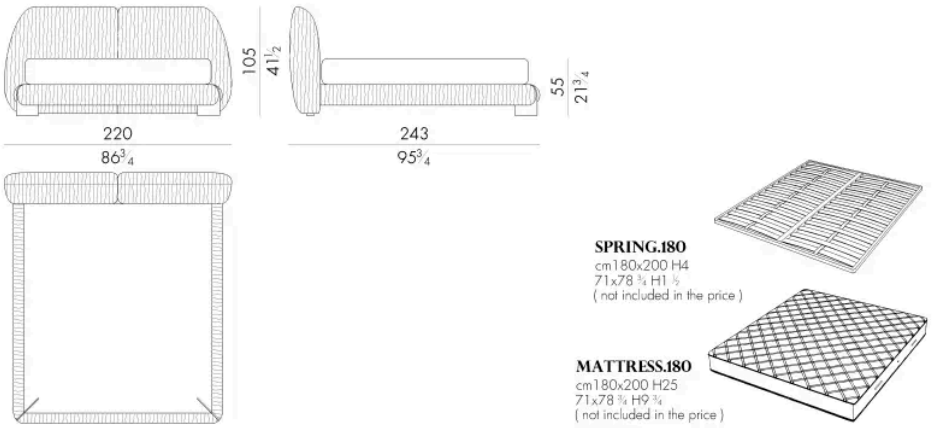

L E A F . 5 1 9 3
Bed

233 W x 246 D x 105 H cm

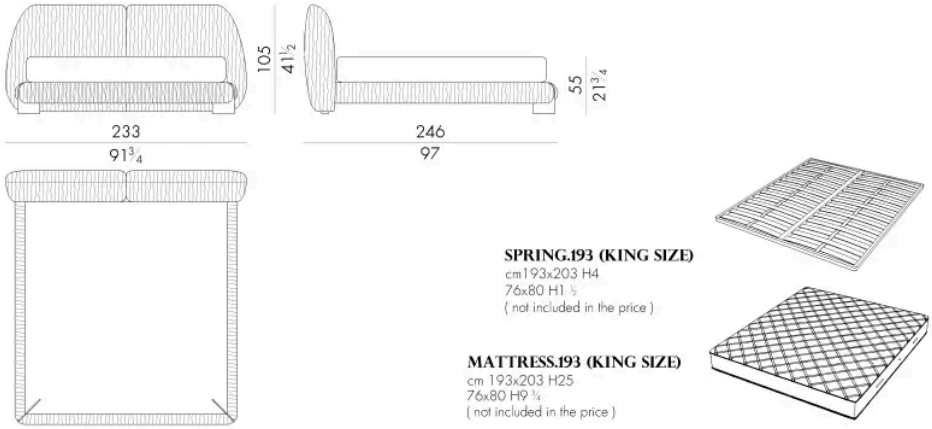

L E A F . 5 2 0 0

Generated: 24/11/2026

Bed

240 W x 243 D x 105 H cm

