Hug

BED

Generated: 23/11/2026



Within the HESSENTIA world, Hug is a contemporary upholstered bed characterized by a volumetric headboard covered in soft three-dimensional embroidery with a diamond pattern. The bed belongs to Hug collection, which also includes sofas, armchairs, a bench and coordinated poufs.

The headboard has a broad, enveloping lines designed to visually define the area dedicated to rest. The diamond pattern runs across the surface, creating a sequence of reliefs that accentuate its depth.

The embroidery is not merely decorative: it shapes the volume and reveals the tailoring skill required to create the upholstery. Each line helps maintain geometric order while preserving a soft visual perception.

Hug is available upholstered in leather or fabric. Leather makes the diamond pattern more clearly defined, while textured fabrics can reinforce the sense of softness and depth.

The bed frame retains more restrained proportions, allowing the headboard to take centre stage. The relationship between the two elements creates a balance between visual impact and comfort, without the need for additional decorative details.

Hug bed can be coordinated with the bench and poufs from the same collection, creating a coherent sleeping area through shape, embroidery and upholstery choices.

Handmade in Italy, Hug interprets bedroom design through volume, comfort and three-dimensional tailoring embroidery.

Dimensions

HUG.5153/TR
Bed

210 W x 238 D x 120 H cm

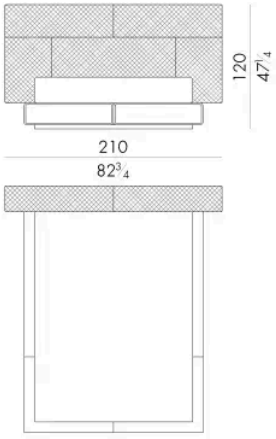



SPRING.153 (QUEEN SIZE)
cm153x203 H4
60 ¼x80 H1 ½
(not included in the price)



MATTRESS.153 (QUEEN SIZE)
cm153x203 H25
60 ¼x80 H9 ¾
(not included in the price)

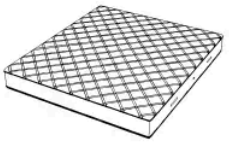

HUG.5160/TR
Bed

210 W x 235 D x 120 H cm

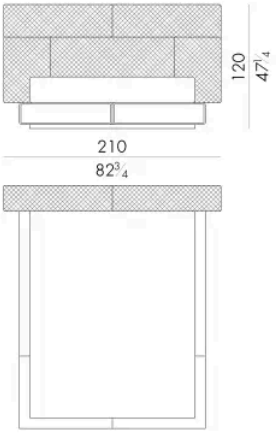

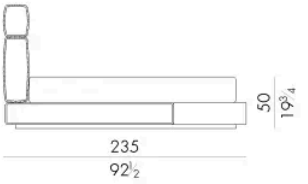

SPRING.160
cm160x200 H4
63x78 ¾ H1 ½
(not included in the price)



MATTRESS.160
cm160x200 H25
63x78 ¾ H9 ¾
(not included in the price)



HUG.5180/TR
Bed

230 W x 235 D x 120 H cm

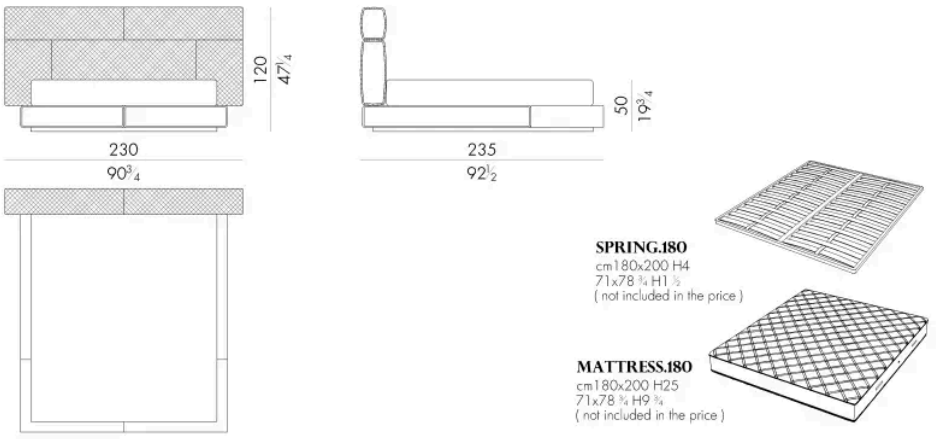

HUG.5193/TR
Bed

250 W x 238 D x 120 H cm

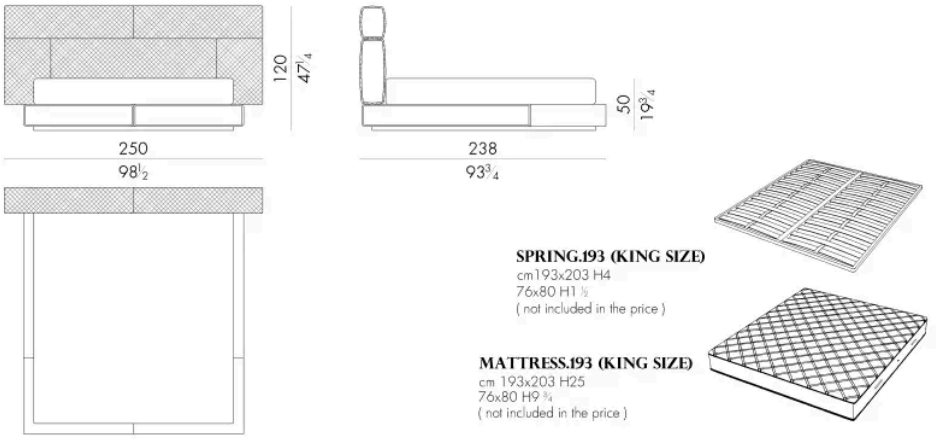

H U G . 5 2 0 0 / T R

Generated: 23/11/2026

Bed

250 W x 235 D x 120 H cm

