Rubik

MODULAR SOFA



Within the HESSENTIA world, Rubik modular sofa interprets modularity through the combination of squared volumes supported by a metal base that keeps the composition raised from the floor. The contrast between the compact upholstered parts and the lightness of the lower structure defines a seating system with a precise and recognizable design.

The surface of the sofa is characterized by cordonetto embroidery, a tailoring technique composed of horizontal and vertical stitching that runs across the volumes of the outer structure. The embroidery emphasizes the geometry of the elements and transforms the workmanship of the upholstery into one of the collection's main distinctive features.

Rubik system includes numerous modules of different sizes and configurations, which can be used individually or combined to create linear, corner and more articulated compositions. Modularity allows the sofa to adapt to the proportions of the interior while maintaining visual continuity between structure, upholstery and tailoring workmanship.

This modular is available in leather or fabric and can be enriched with coordinated cushions. The combination of geometric volumes, metal base and cordonetto embroidery makes the system suitable for different living configurations, including in combination with coffee tables and accessories.

Handmade in Italy, Rubik brings together geometry, modularity and tailoring precision, transforming the succession of stitches into a distinctive element that gives rhythm and depth to the surface.

Dimensions

Generated: 24/11/2026

RUBIK.01
Modular element

82 W x 114 D x 40 H cm

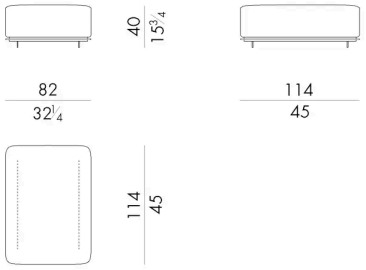

RUBIK.02
Modular element

82 W x 114 D x 65 H cm

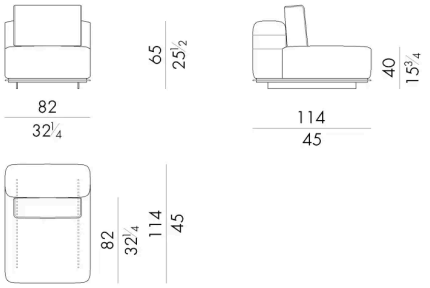

RUBIK.11/SX - RUBIK.11/DX
Modular element

110 W x 162 D x 65 H cm

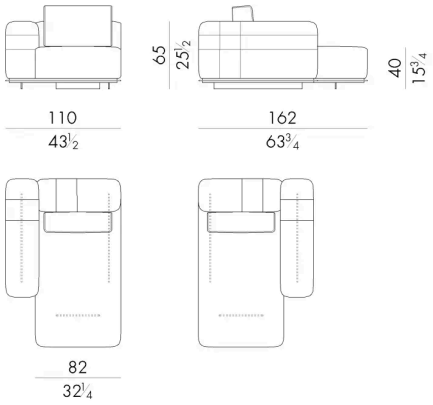

RUBIK.21
Modular element

164 W x 114 D x 65 H cm

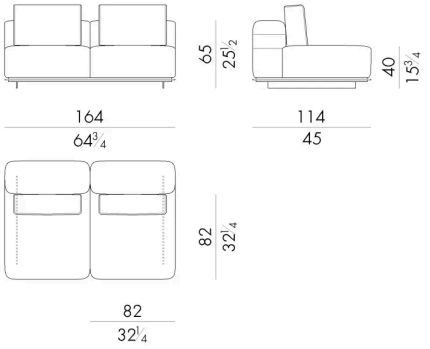

RUBIK.22/SX - RUBIK.22/DX
Modular element

192 W x 114 D x 65 H cm

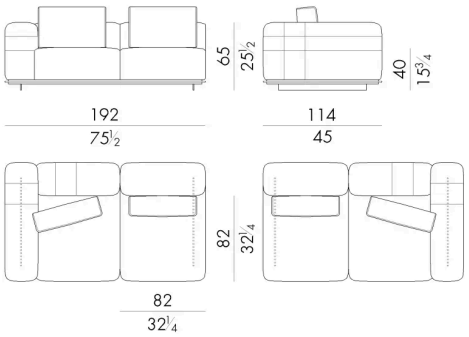

RUBIK.23
Modular element

220 W x 114 D x 65 H cm

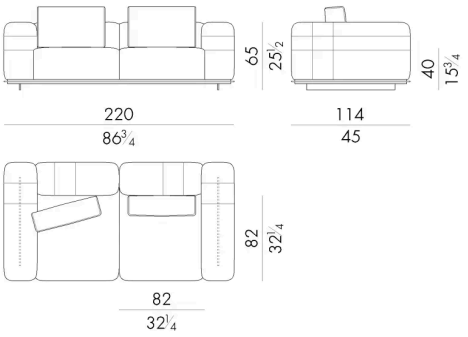

RUBIK.24/SX - RUBIK.24/DX
Modular element

164 W x 114 D x 65 H cm

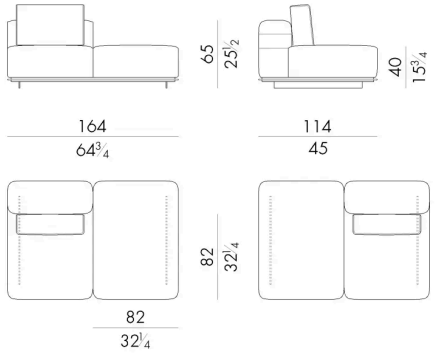

RUBIK.25/SX - RUBIK.25/DX
Modular element

192 W x 114 D x 65 H cm

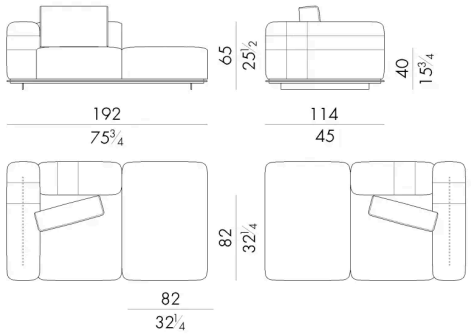

RUBIK.26/SX - RUBIK.26/DX
Modular element

220 W x 114 D x 65 H cm

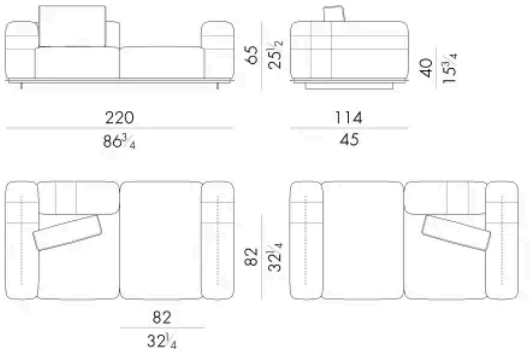

RUBIK.27/SX - RUBIK.27/DX
Modular element

192 W x 114 D x 65 H cm

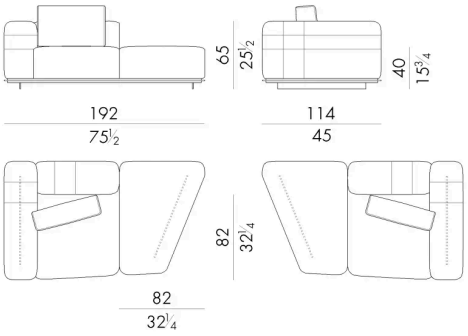

RUBIK.31
Modular element

246 W x 114 D x 65 H cm

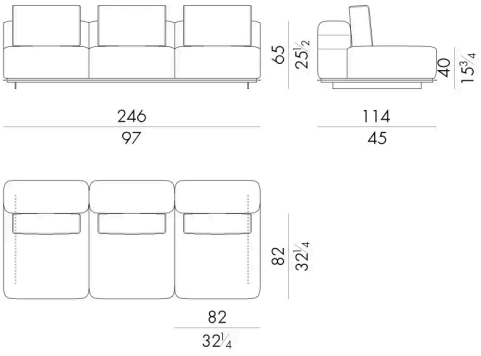

RUBIK.32/SX - RUBIK.32/DX
Modular element

274 W x 114 D x 65 H cm

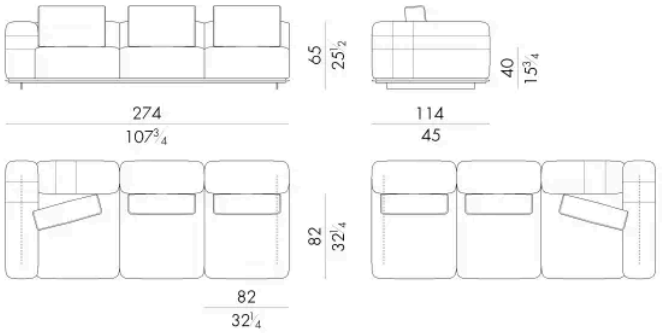

RUBIK.33
Modular element

302 W x 114 D x 65 H cm

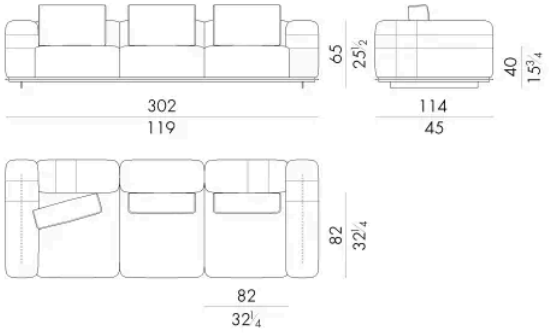

RUBIK.34/SX - RUBIK.34/DX
Modular element

246 W x 114 D x 65 H cm

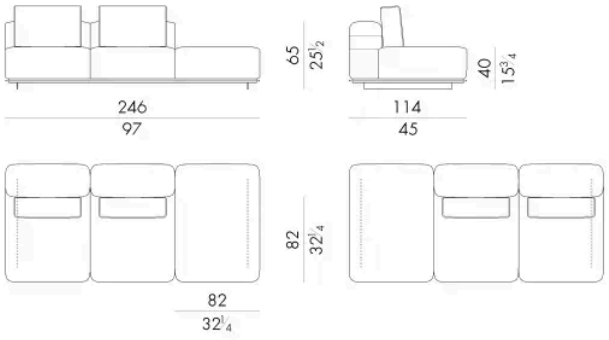

RUBIK.35/SX - RUBIK.35/DX
Modular element

274 W x 114 D x 65 H cm

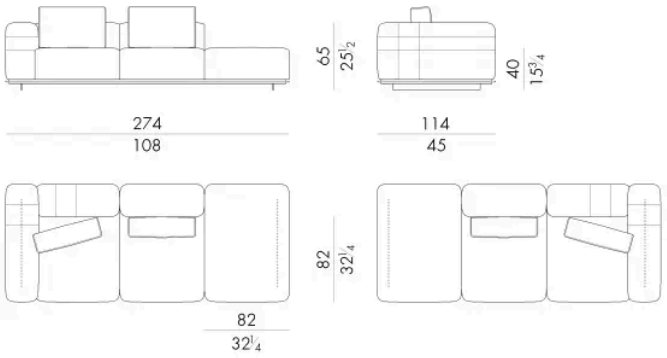

RUBIK.36/SX - RUBIK.36/DX
Modular element

302 W x 114 D x 65 H cm

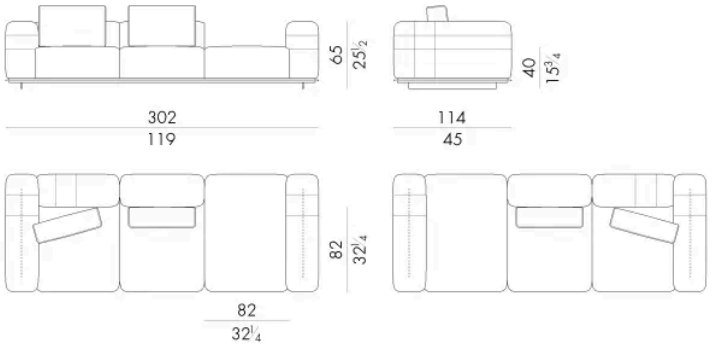

RUBIK.2800/SX - RUBIK.2800/DX
Modular sofa

470 W x 277 D x 65 H cm

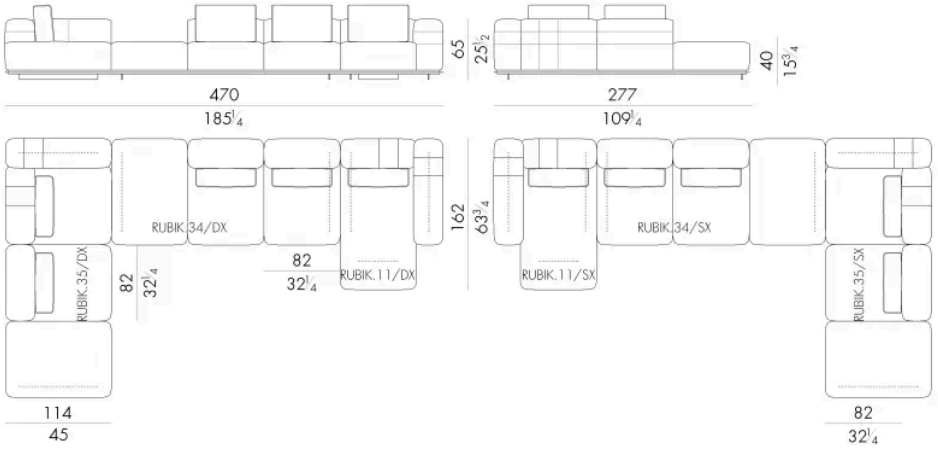

RUBIK.2500/SX - RUBIK.2500/DX
Modular sofa

302 W x 162 D x 65 H cm

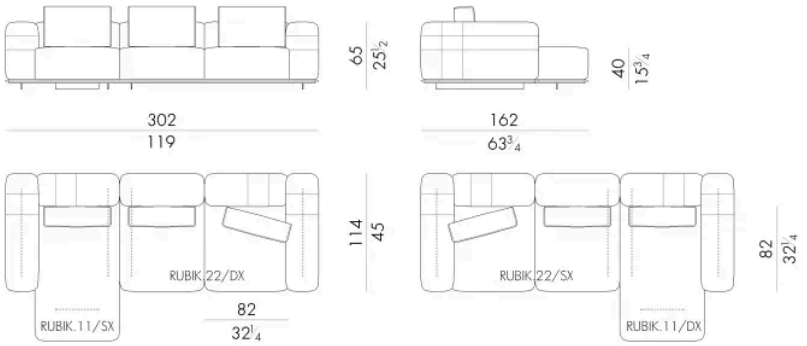

RUBIK.2600/SX - RUBIK.2600/DX
Modular sofa

384 W x 162 D x 65 H cm

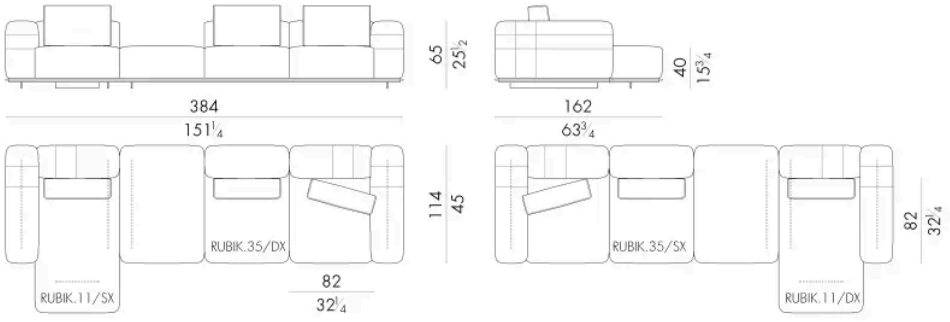

RUBIK.2650/SX - RUBIK.2650/DX
Modular sofa

356 W x 162 D x 65 H cm

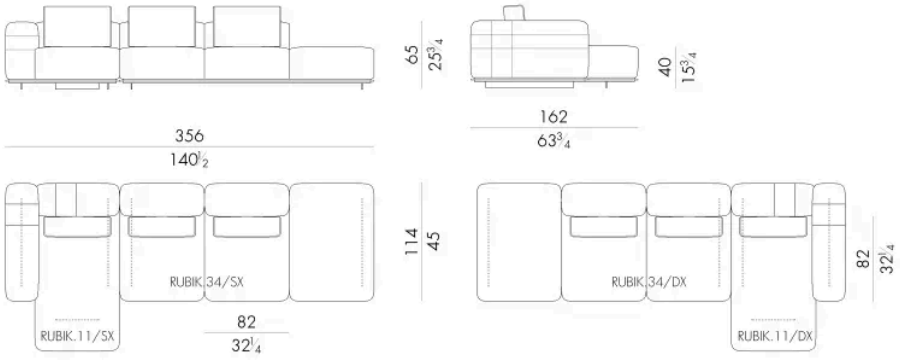

RUBIK.2700/SX - RUBIK.2700/DX
Modular sofa

374 W x 172 D x 65 H cm

