Nova

TABLE



Nova is a HESSENTIA table in which marble and brass come together in a fluid, striking dialogue. The ribbon-shaped base supports the marble top and follows its shape, enhancing the stone's veining, depth and material presence.

Brass, available in polished or matt finishes, introduces warm, sophisticated light. Some parts are hand-decorated to create a sculptural effect that gives each piece a different appearance, making the base an expressive element as well as a structural one.

The round version, also available with a lazy Susan, becomes a centre for gathering that encourages a more fluid interaction between people and space. The natural uniqueness of marble and the quality of the metal finishes strengthen the table's character, expressing HESSENTIA's balance of material, craftsmanship and contemporary Made in Italy design.

HESSENTIA can customize this piece to suit your project needs. Some limitations apply.

Dimensions

Generated: 23/11/2026

NOVA.5150
Table

DIAM. 150 x 74 H cm

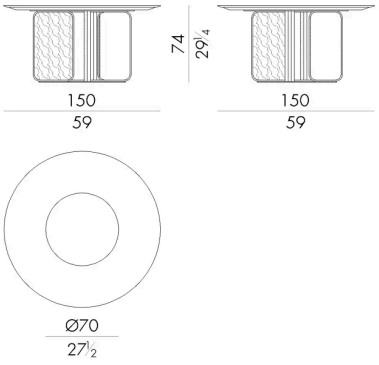

NOVA.5160
Table

DIAM. 160 x 74 H cm

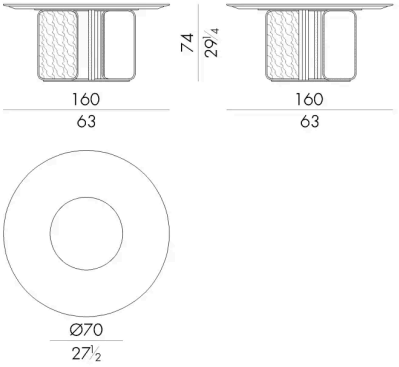

NOVA.5180
Table

DIAM. 180 x 74 H cm

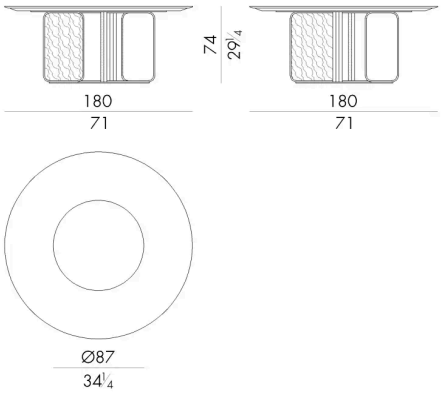

NOVA.5200
Table

DIAM. 200 x 76 H cm

