Kiro

SOFA

Generated: 25/11/2026



The strong personality of HESSENTIA is clearly visible in KIRO sofa, realized both with and without armrest. The base is available in different options such as open-pore painted ash wood or ziricote wood. KIRO is characterized by the milled structure that makes it a bold sofa, suitable to furnish the centre of a room or to be placed against a wall. Its vigorous shape makes it the main character of the ambience in which it is placed, adapting very well to the furniture that surround it.

Dimensions

Generated: 25/11/2026

KIRO.2300/BR
Sofa

234 W x 123 D x 73 H cm

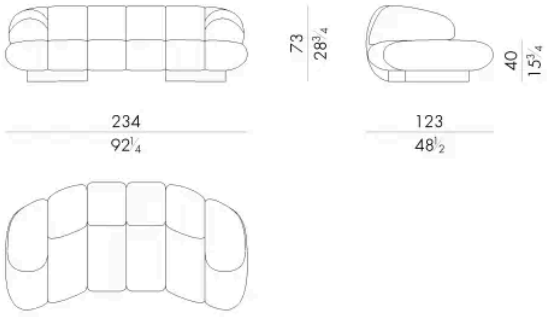

KIRO.2400/BR
Sofa

272 W x 123 D x 73 H cm

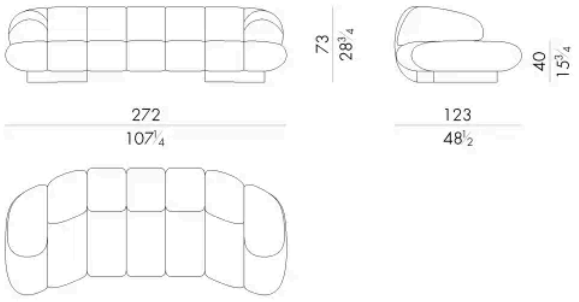

KIRO.2500/BR
Sofa

310 W x 123 D x 73 H cm

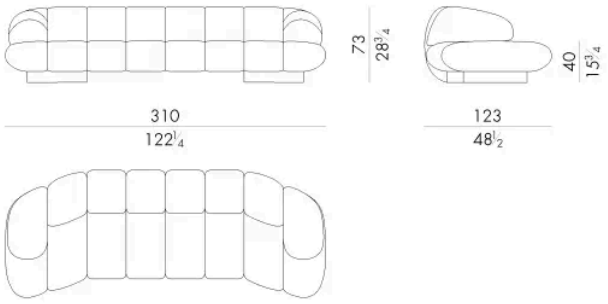

KIRO.2600/BR
Sofa

348 W x 123 D x 73 H cm

