Ovoo

TABLE



Ovoo is a HESSENTIA table inspired by Mongolia’s ritual landscapes and the ancient tradition of stone cairns, built on mountain peaks as symbolic markers and points of reference. The marble version interprets the table as a sculptural, monolithic presence.

Thick marble takes centre stage: veining, colours and surface variations create a unique identity, making each piece one of a kind. Bronze artistic metal casting elements, enhanced by a textured patina, introduce a warm, deep contrast, enriching the dialogue between the mineral surface and the craftsmanship of the cast legs.

This variant shows Ovoo’s most expressive, architectural character. The continuity of marble gives strength and solidity, while bronze artistic metal casting adds intensity and character. Each table becomes a unique piece in which material, memory and contemporary Made in Italy design meet.

HESSENTIA can customize this piece to suit your project needs. Some limitations apply.

Dimensions

OVOO.5140/MA
Table

145 W x 140 D x 74 H cm

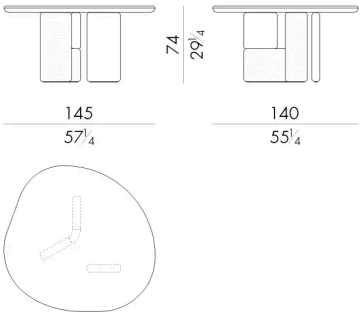

OVOO.5160/MA
Table

165 W x 160 D x 74 H cm

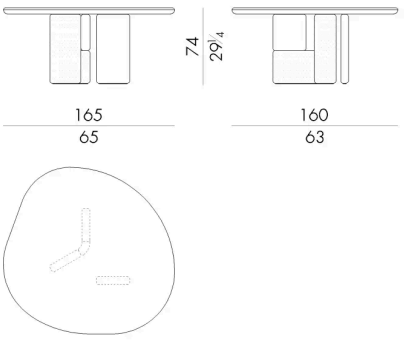

OVOO.5195/MA
Table

225 W x 195 D x 74 H cm

