Ovoo

TABLE



Ovoo is a HESSENTIA table inspired by Mongolia's ritual landscapes and the ancient tradition of stone cairns, built on mountain peaks as symbolic markers and points of reference. The lacquered version offers a more graphic, contemporary interpretation of the design through lacquered surfaces, overlapping components and artistic brass casting elements with a patinated finish.

The amorphous top and lacquered legs define a compact, colour-focused and restrained appearance. Artistic brass casting introduces depth, warmth and a handcrafted material presence, creating a refined contrast between precision of shapes and the sensitivity of handwork.

This version of Ovoo is designed for those seeking a contemporary table that combines visual rigour, colour and textured detail. Lacquered finishes and brass casting elements make each piece recognisable, preserving HESSENTIA's relationship between material, design and Italian craftsmanship.

HESSENTIA can customize this piece to suit your project needs. Some limitations apply.

Dimensions

Generated: 24/11/2026

OVOO.5140/LA
Table

145 W x 140 D x 74 H cm

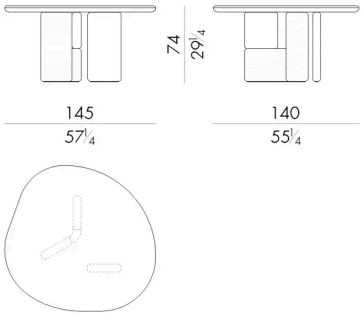

OVOO.5160/LA
Table

165 W x 160 D x 74 H cm

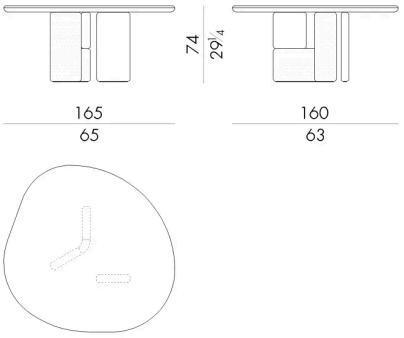

OVOO.5180/LA
Table

185 W x 180 D x 74 H cm

