Lineup

TABLE

Generated: 25/11/2026



Lineup is a HESSENTIA table in which geometric rigour and decorative intensity find a refined balance. The light, precise metal structure is enhanced with hand engraving inspired by the sensitivity and technical expertise of Italian high jewellery.

This simple structure contrasts with a top whose decorative finish is based on resins, coloured pigments and natural elements. The surface becomes a textured landscape of visual depth, reflections and colour variations, giving each table a unique appearance.

Lineup interprets the contemporary dining area as an ambience balancing order and wonder. Its carefully considered geometries embrace a vibrant, decorative material, creating a sophisticated presence in which handcraftsmanship, colour and Made in Italy design engage naturally.

HESSENTIA can customize this piece to suit your project needs. Some limitations apply.

Dimensions

Generated: 25/11/2026

LINEUP.8200
Table

200 W x 100 D x 75 H cm

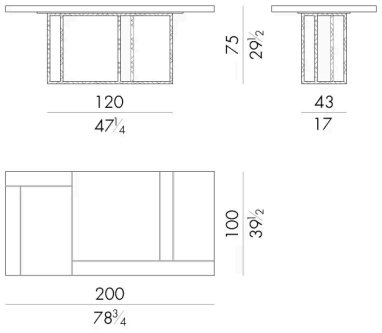

LINEUP.8240
Table

240 W x 110 D x 75 H cm

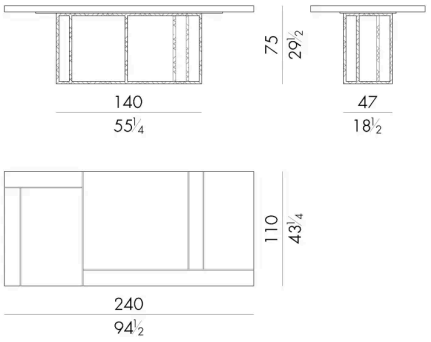

LINEUP.8280
Table

280 W x 110 D x 75 H cm

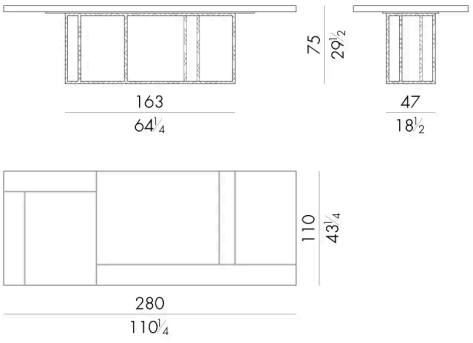

LINEUP.8350

Table

Generated: 25/11/2026

350 W x 110 D x 75 H cm

