# Jannik

**BED**

Generated: 24/11/2026



Within the HESSENTIA world, Jannik is a contemporary upholstered bed that combines geometric rigour, generous volumes and a perception of enveloping softness. The design balances structural clarity with a visual presence focused on comfort.

The headboard features a balanced horizontal extension and a relatively low profile. These proportions give the bed a broad, grounded appearance without visually overwhelming the bedroom wall.

The bed frame retains full, generous volumes, creating continuity with the headboard and reinforcing the sense of comfort. The upholstered structure follows the mattress and defines a soft perimeter around the sleeping area.

This bed is available in a wide range of leathers and fabrics. Upholstery customisation emphasizes the rigour of the design through compact surfaces or enhance its more tactile character with visibly textured fabrics.

The absence of pronounced decoration allows proportion, upholstery and material quality to emerge. The bed is suitable for contemporary bedrooms with different stylistic languages, from more essential settings to more decorative interiors.

Its generous dimensions make Jannik bed the perfect choice for spacious bedrooms and suites in which the bed is intended to become the main element of the composition.

Handmade in Italy, Jannik interprets rest through a balance between reason and emotion, geometric precision and enveloping comfort.

# Dimensions

Generated: 24/11/2026

**JANNIK.5153**
Bed

205 W x 258 D x 82 H cm

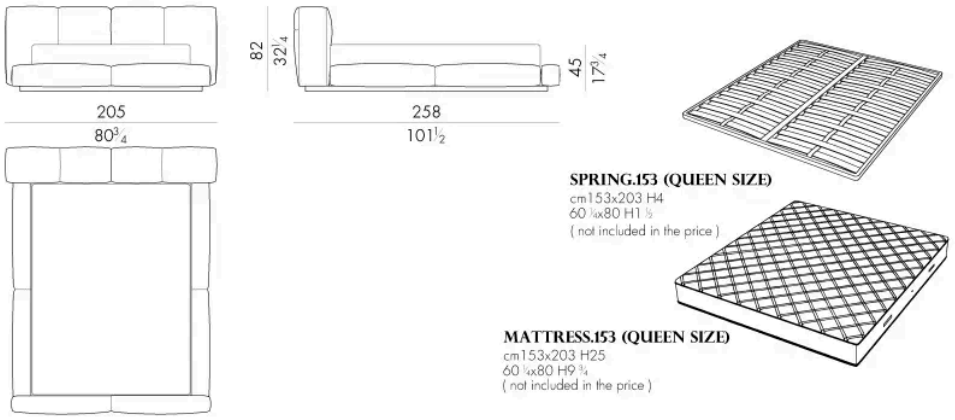


**JANNIK.5160**
Bed

205 W x 255 D x 82 H cm

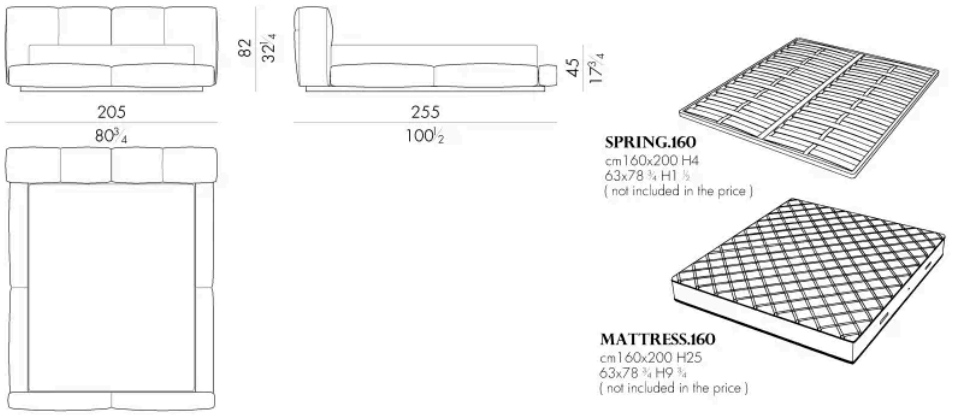

**JANNIK.5180**
Bed

225 W x 255 D x 82 H cm

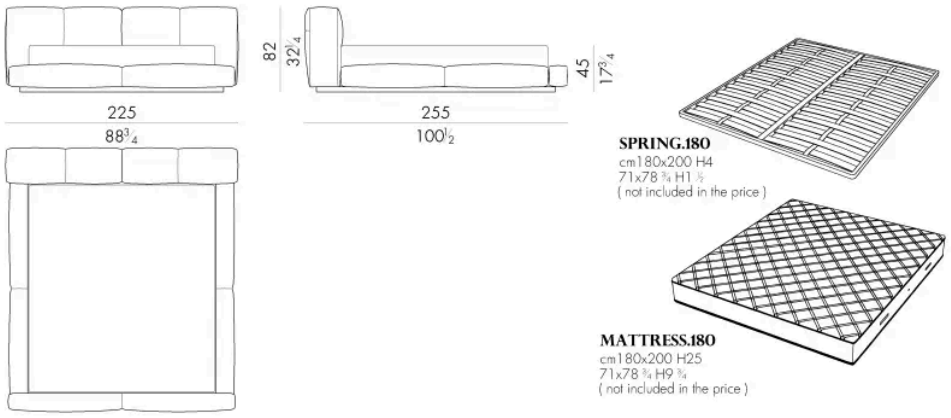


**JANNIK.5193**
Bed

245 W x 258 D x 82 H cm

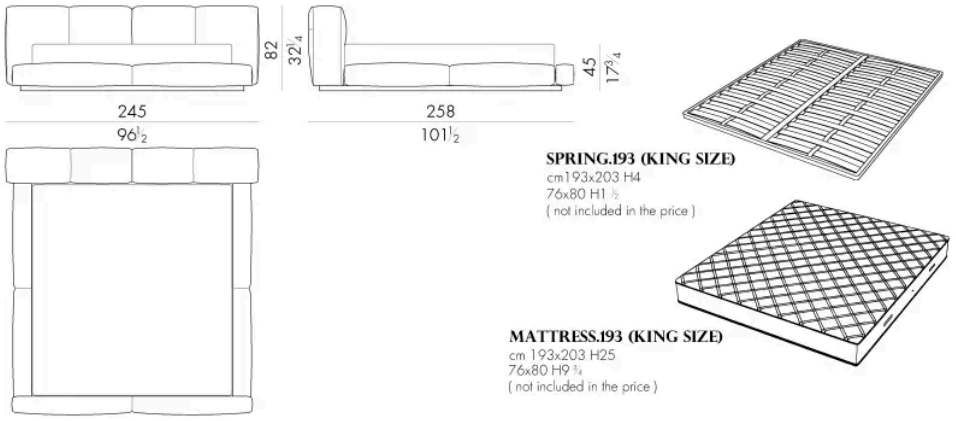

**JANNIK.5200**

Generated: 24/11/2026

Bed

245 W x 255 D x 82 H cm

