Cliff

MODULAR SOFA



Within the HESSENTIA world, Cliff modular sofa is a seating system designed around comfort and the possibility of changing the seating position. Its main distinctive feature is the back, composed of a cushion whose inclination can be easily adjusted, adapting the level of support to different ways of sitting.

The modularity of Cliff allows very different compositions to be developed, from corner and semicircular configurations to more articulated geometries. The combination of elements enables the sofa either to follow the architecture of the interior or, conversely, to introduce sinuous lines into spaces defined by more regular geometries.

The system also includes trapezoidal and rectangular poufs, available fully upholstered or with a marble top. These elements expand the compositional possibilities and introduce different functions within the system, connecting seating, relaxation and supporting surfaces.

This modular sofa can be upholstered in leather or fabric and has fully removable covers. The possibility of selecting configuration and upholstery allows the design to adapt to contemporary living areas of different sizes and characteristics.

Handmade in Italy, Cliff interprets modularity through adjustable back, compositional freedom and different geometries, creating an ambience dedicated to comfort in which function becomes an integral part of the design.

Dimensions

CLIFF.01/SX - CLIFF.01/DX
Modular element

121 W x 135 D x 80 H cm

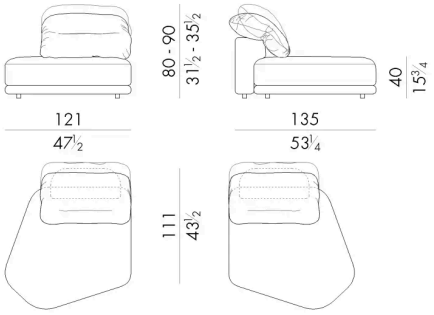

CLIFF.02/SX - CLIFF.02/DX
Modular element

150 W x 111 D x 80 H cm

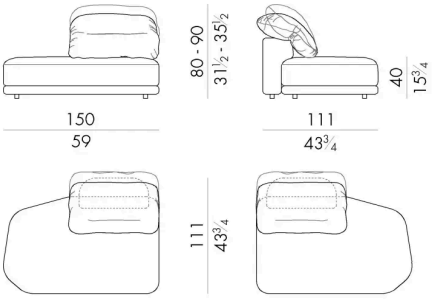

CLIFF.04/SX - CLIFF.04/DX
Modular element

208 W x 135 D x 80 H cm

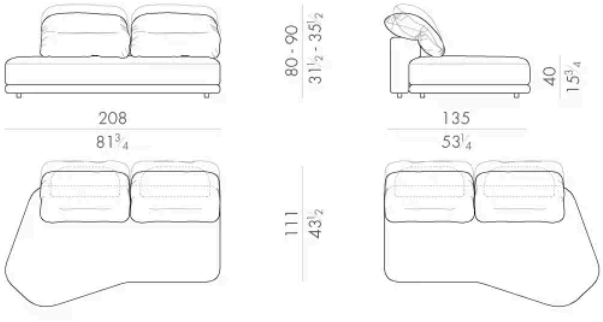

CLIFF.06/SX - CLIFF.06/DX
Modular element

237 W x 111 D x 80 H cm

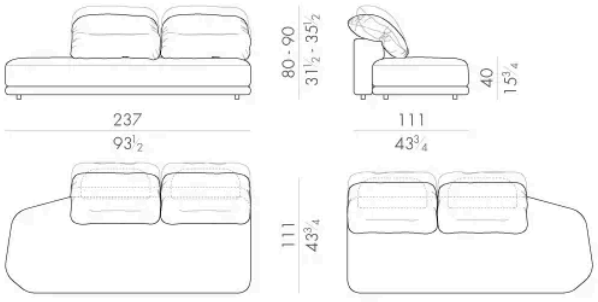

CLIFF.03/SX - CLIFF.03/DX
Modular element

222 W x 141 D x 80 H cm

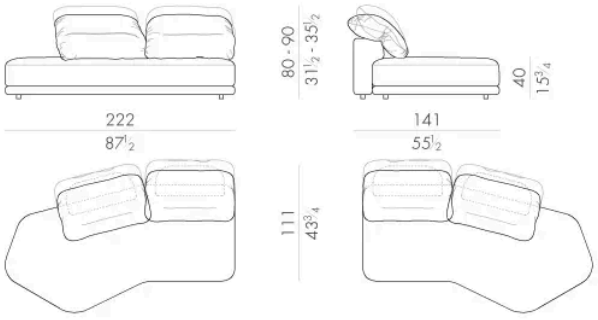

CLIFF.21
Modular element

167 W x 127 D x 80 H cm

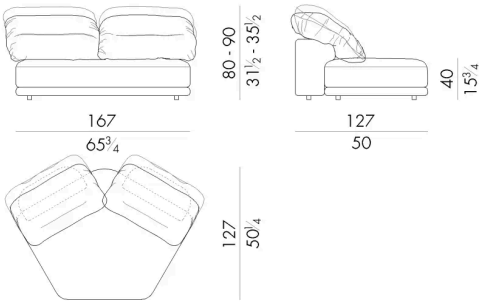

CLIFF.11
Modular element

87 W x 111 D x 80 H cm

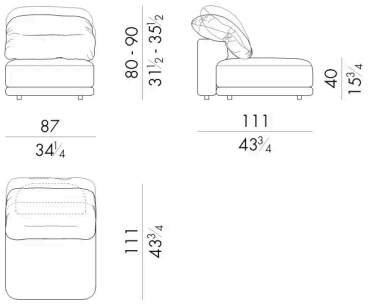

CLIFF.12
Modular element

174 W x 111 D x 80 H cm

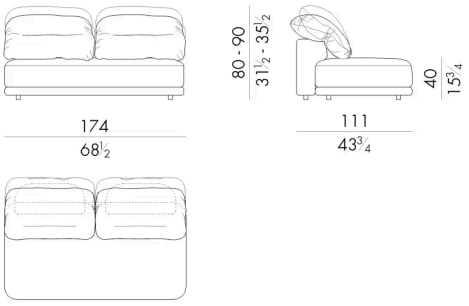

CLIFF.13
Modular element

61 W x 92 D x 40 H cm

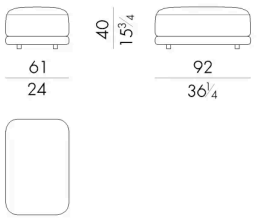

CLIFF.14
Modular element

76 W x 92 D x 40 H cm

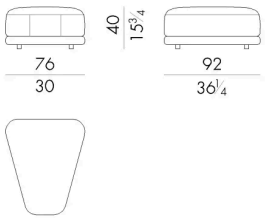

CLIFF.13/TRAY
Modular element

61 W x 92 D x 39 H cm

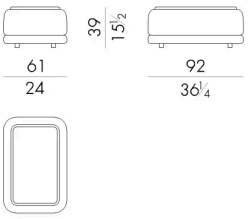

CLIFF.14/TRAY
Modular element

76 W x 92 D x 39 H cm

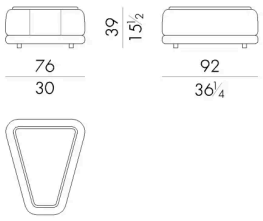

CLIFF.31/SX - CLIFF.31/DX
Modular element

93 W x 195 D x 80 H cm

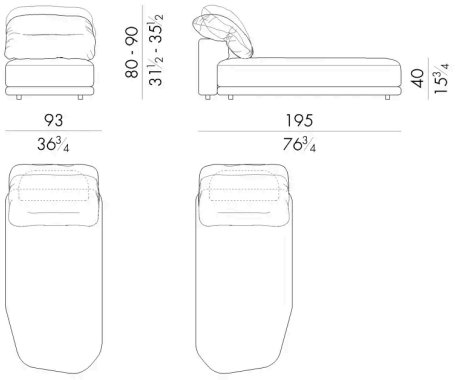

CLIFF.2300/SX - CLIFF.2300/DX
Modular sofa

373 W x 171 D x 80 H cm

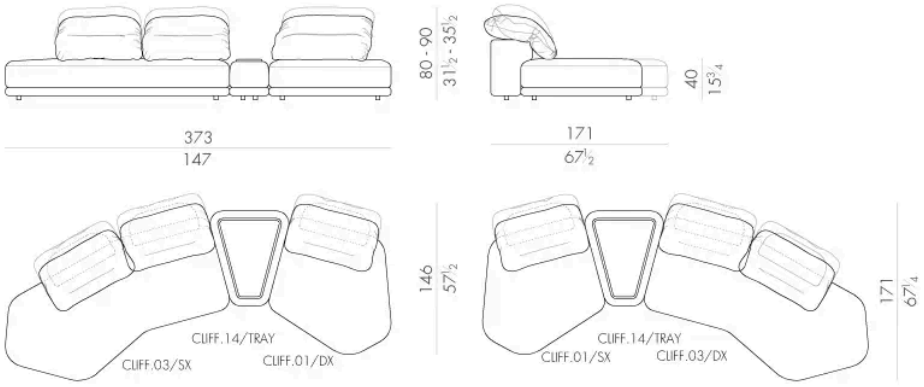

CLIFF.2800/SX - CLIFF.2800/DX
Modular sofa

393 W x 342 D x 80 H cm

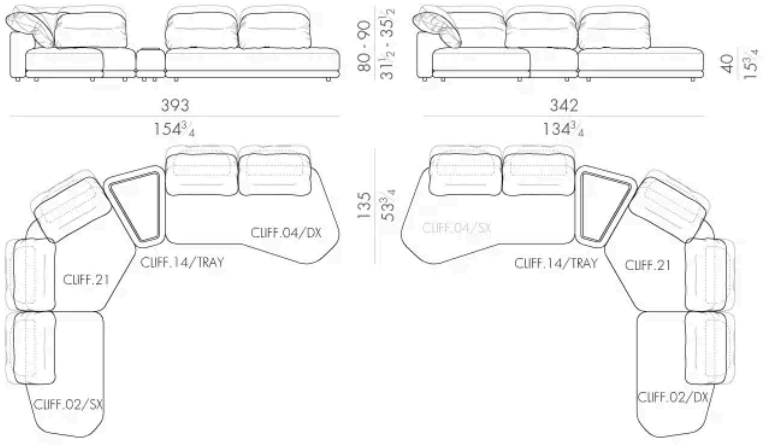

CLIFF.2900/SX - CLIFF.2900/DX

Generated: 24/11/2026

Modular sofa

598 W x 312 D x 80 H cm

