Mami

BED



Mami is a contemporary upholstered bed characterized by soft, rounded shapes and generous volumes. The composition is built through elements that appear shaped and assembled to create a welcoming and visually enveloping presence.

The headboard has a broad, continuous profile, while the bed frame maintains the same formal softness. The relationship between the different elements produces a compact structure free from visual rigidity and immediately associated with comfort.

Mami bed interprets the bedroom through an informal and reassuring language. Its rounded shapes soften the traditional geometry of the bed and create a gentler relationship with the body and the surrounding space.

The generosity of the volumes is not used only to communicate comfort, but also contributes to defining the character of the design. Each element appears full and upholstered, creating a composition capable of becoming the visual centre of the room.

This bed is available upholstered in leather or fabric. The choice of material and colour makes it possible to customize the surface and adapt the bed to different interior atmospheres.

Its proportions make the bed suitable for contemporary bedrooms seeking a balance between presence, softness and familiarity. It can be paired with night tables, chests of drawers and accessories with more essential shapes, creating a measured contrast.

Handmade in Italy, Mami interprets rest within the HESSENTIA world through enveloping volumes, upholstery and tailoring sensitivity.

Dimensions

Generated: 23/11/2026

MAMI.5153
Bed

208 W x 253 D x 110 H cm

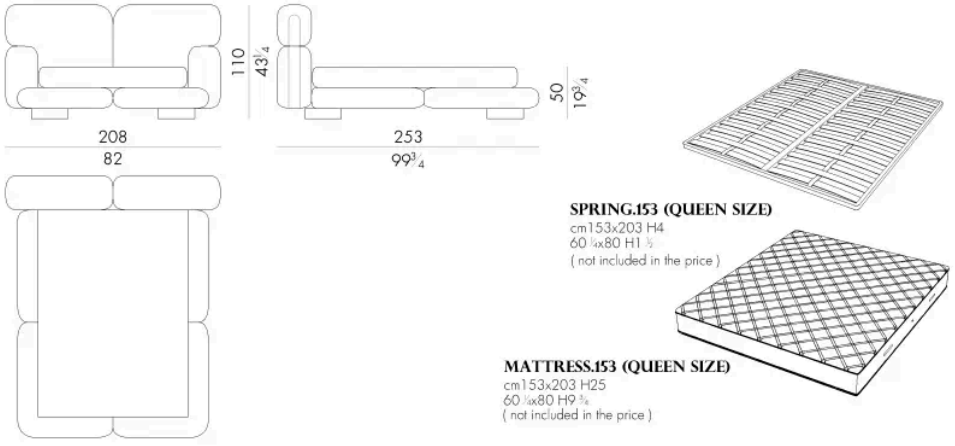

MAMI.5160
Bed

215 W x 250 D x 110 H cm

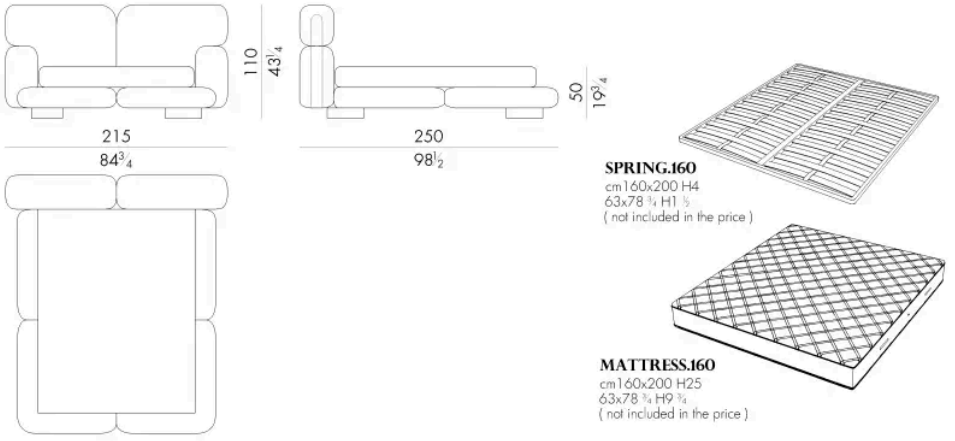

M A M I . 5 1 8 0
Bed

235 W x 250 D x 110 H cm

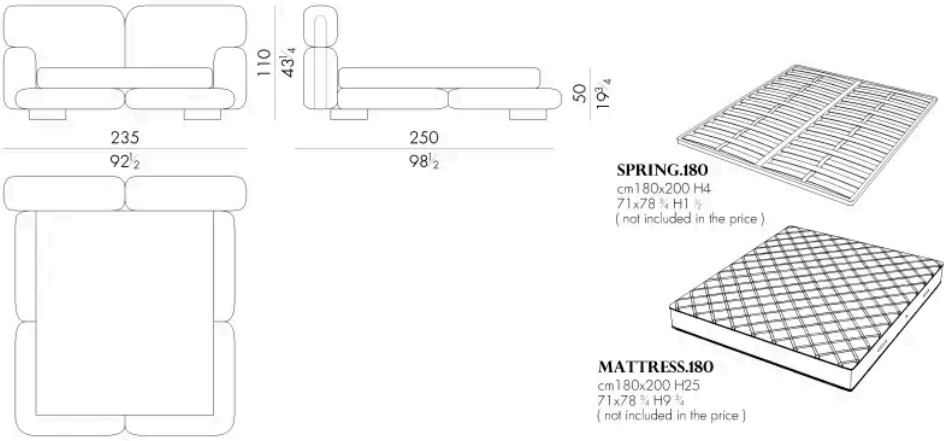

M A M I . 5 1 9 3
Bed

248 W x 253 D x 110 H cm

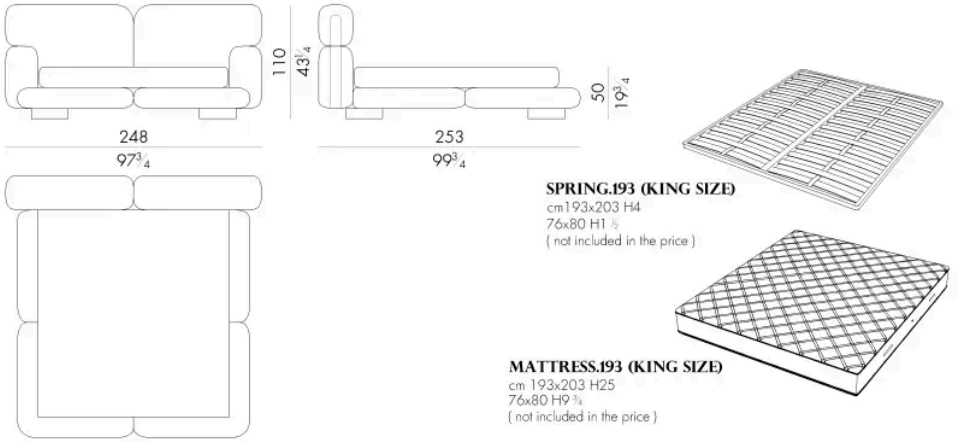

MAMI.5200

Generated: 23/11/2026

Bed

255 W x 250 D x 110 H cm

