Spinnaker

TABLE

Generated: 24/11/2026



Spinnaker is one of HESSENTIA's iconic tables, inspired by the elegance and lightness of sails opening to the wind. The marble top, available as a single piece or divided into sections by soft curves, defines a striking surface in which natural material, movement and proportion engage in balance.

The double-arch base evokes the architectural geometries of the 1930s, introducing a sculptural presence with a strong character. The artistic bronze elements, crafted using the ancient sand-casting technique, enhance the natural character of the surfaces, highlighting rich textures, tactile finishes and subtle variations that make each piece unique to the eye and to the touch.

Across its different compositions, Spinnaker interprets the table as a dynamic, architectural element, combining the natural uniqueness of marble with the expressive strength of artistic bronze casting. The result is contemporary Made in Italy furniture in which nautical inspiration, design heritage and HESSENTIA's exploration of materials find a refined synthesis.

HESSENTIA can customize this piece to suit your project needs. Some limitations apply.

Dimensions

Generated: 24/11/2026

SPINNAKER.8240
Table

240 W x 120 D x 73 H cm

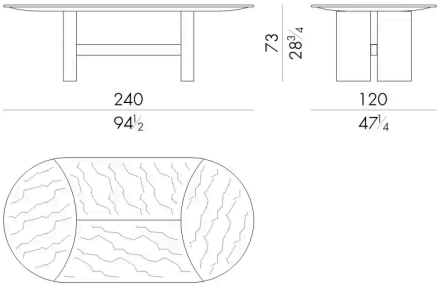

Marble top divided into pieces
obtained by different slabs

SPINNAKER.8240/B
Table

240 W x 120 D x 73 H cm

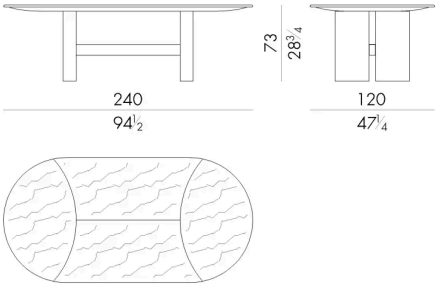

Marble top divided into pieces
obtained by the same slab

SPINNAKER.8240/U
Table

240 W x 120 D x 73 H cm

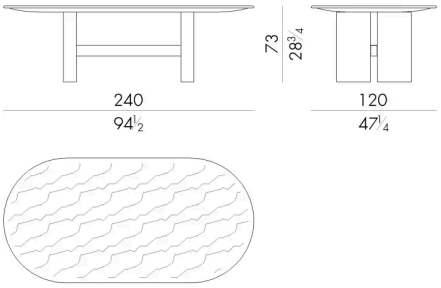

SPINNAKER.8270
Table

270 W x 120 D x 73 H cm

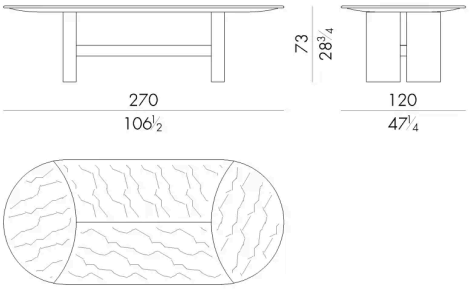

Marble top divided into pieces
obtained by different slabs

Generated: 24/11/2026

SPINNAKER.8270/B
Table

270 W x 120 D x 73 H cm

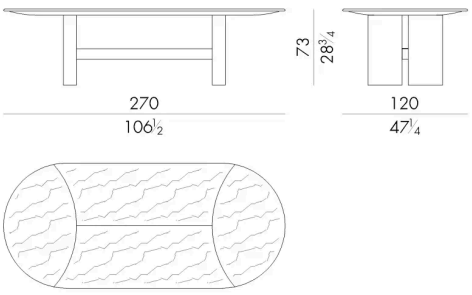

Marble top divided into pieces
obtained by the same slab

SPINNAKER.8270/U
Table

270 W x 120 D x 73 H cm

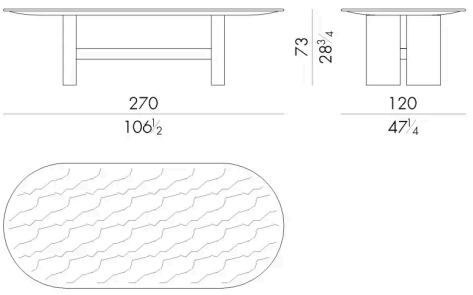

SPINNAKER.8300
Table

300 W x 120 D x 73 H cm

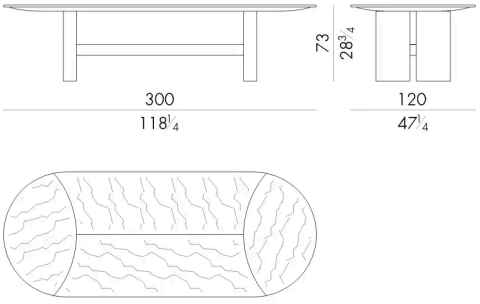

Marble top divided into pieces
obtained by different slabs

SPINNAKER.8300/B
Table

300 W x 120 D x 73 H cm

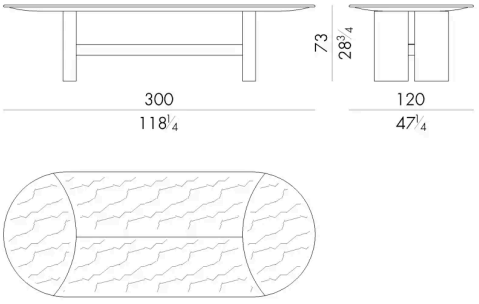

Marble top divided into pieces
obtained by the same slab

SPINNAKER.8300/U
Table

Generated: 24/11/2026

300 W x 120 D x 73 H cm

