Cholet

MODULAR SOFA



Cholet modular sofa is defined by the contrast between the rigorous geometry of its structural volumes and the softness of the cushions that complete the seating. This relationship between more defined parts and soft surfaces shapes the identity of the design and allows the system to retain an ordered presence even in its most articulated configurations.

Modularity is at the heart of Cholet design. The system includes more than thirty elements of different shapes and sizes, from which over five hundred combinations can be created. This versatility allows for a wide range of customised configurations, tailored to the available space, the proportions of the ambience and the specific needs of each living area.

The elements can generate linear, corner, deep or progressively curved configurations. Cholet can therefore be placed against a wall or at the centre of the room, in more intimate interiors as well as in large living spaces, creating compositions that can become almost entirely curvilinear.

The cushions introduce softness within the structure and help modify the perception of the volumes. The contrast between geometry and comfort prevents the modularity from being read as a simple succession of elements, transforming it instead into an organizing system.

This modular sofa is available upholstered in leather or fabric. The possibility of choosing configuration and upholstery allows the design to adapt to contemporary living areas of different sizes and characteristics.

Handmade in Italy, Cholet interprets contemporary living in the HESSENTIA language through broad design possibilities, customization and the cor HESSENTIA gour and softness, offering particularly

extensive compositional freedom.

Dimensions

Generated: 24/11/2026

CHOLET.00
Modular element

115 W x 115 D x 40 H cm

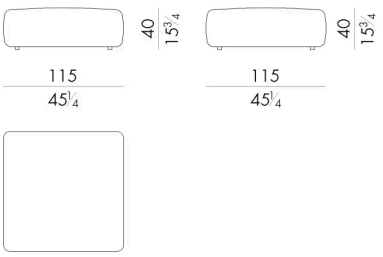

CHOLET.01
Modular element

115 W x 115 D x 68 H cm

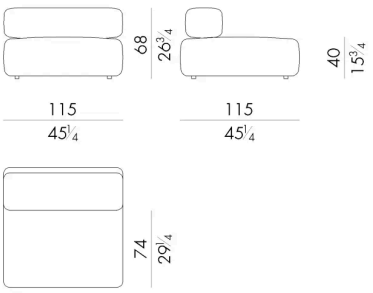

CHOLET.02
Modular element

145 W x 115 D x 68 H cm

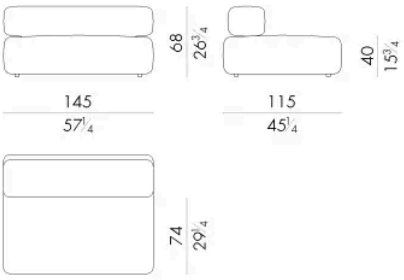

CHOLET.03/SX - CHOLET.03/DX
Modular element

245 W x 115 D x 68 H cm

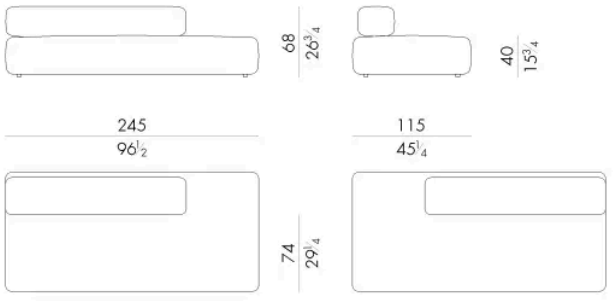

CHOLET.04
Modular element

80 W x 80 D x 40 H cm

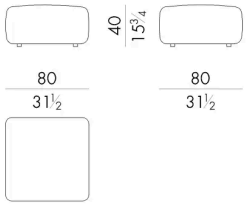

CHOLET.05
Modular element

80 W x 175 D x 40 H cm

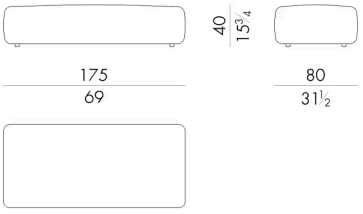

CHOLET.06/SX - CHOLET.06/DX
Modular element

115 W x 115 D x 68 H cm

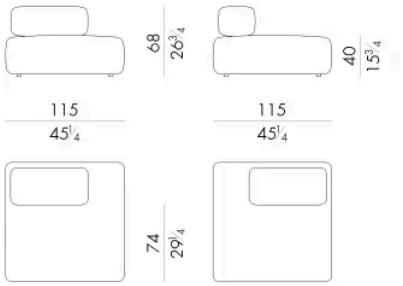

CHOLET.07/SX - CHOLET.07/DX
Modular element

175 W x 115 D x 68 H cm

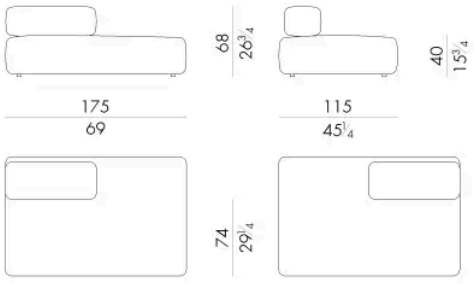

CHOLET.10/SX - CHOLET.10/DX
Modular element

115 W x 115 D x 68 H cm

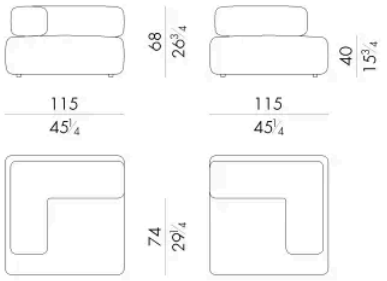

CHOLET.20/SX - CHOLET.20/DX
Modular element

175 W x 115 D x 68 H cm

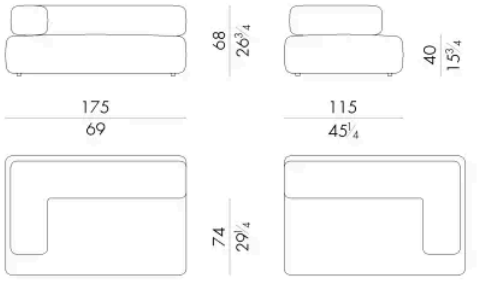

CHOLET.21/SX - CHOLET.21/DX
Modular element

175 W x 115 D x 68 H cm

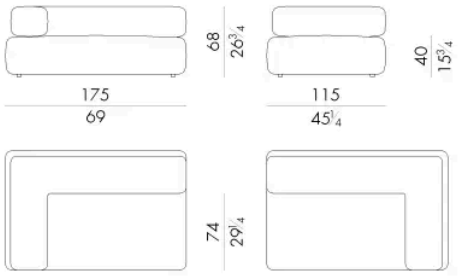

CHOLET.22/SX - CHOLET.22/DX
Modular element

175 W x 115 D x 68 H cm

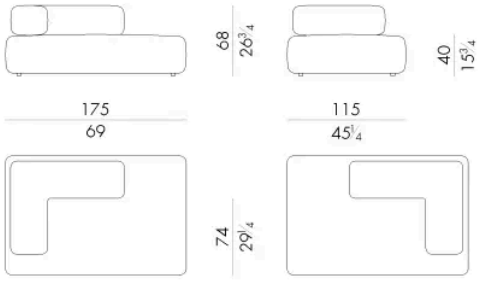

CHOLET.23/SX - CHOLET.23/DX
Modular element

115 W x 175 D x 68 H cm

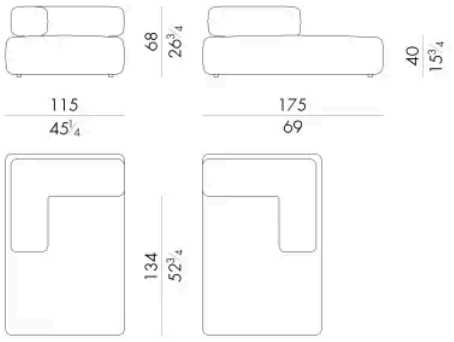

CHOLET.24/SX - CHOLET.24/DX
Modular element

175 W x 129 D x 68 H cm

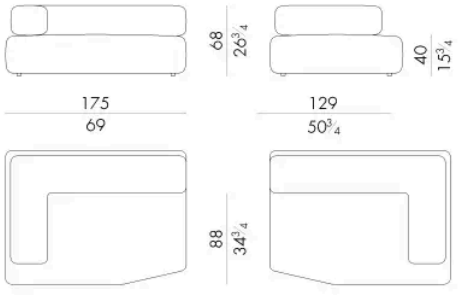

CHOLET.25/SX - CHOLET.25/DX
Modular element

175 W x 129 D x 68 H cm

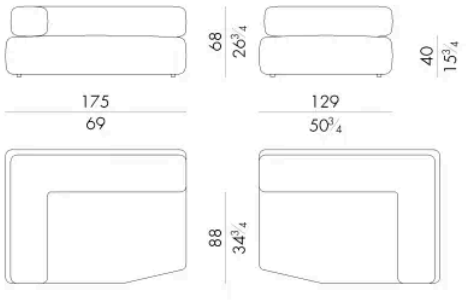

CHOLET.27/SX - CHOLET.27/DX
Modular element

129 W x 175 D x 68 H cm

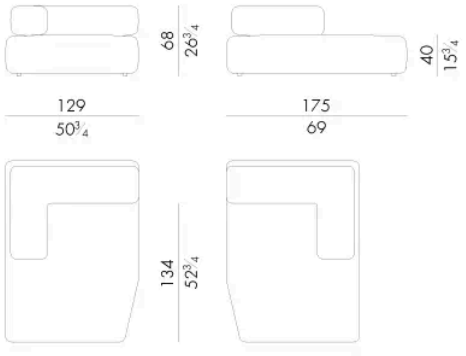

CHOLET.30/SX - CHOLET.30/DX
Modular element

245 W x 115 D x 68 H cm

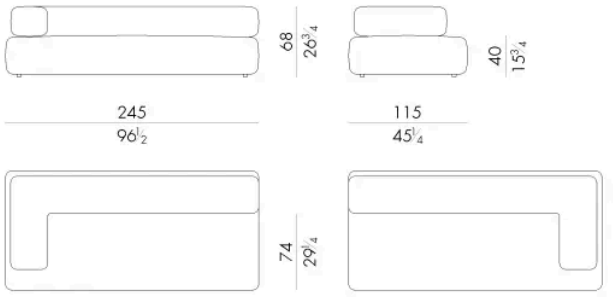

CHOLET.31/SX - CHOLET.31/DX
Modular element

245 W x 115 D x 68 H cm

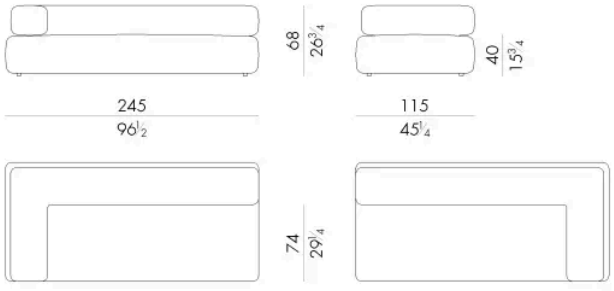

CHOLET.32/SX - CHOLET.32/DX
Modular element

245 W x 115 D x 68 H cm

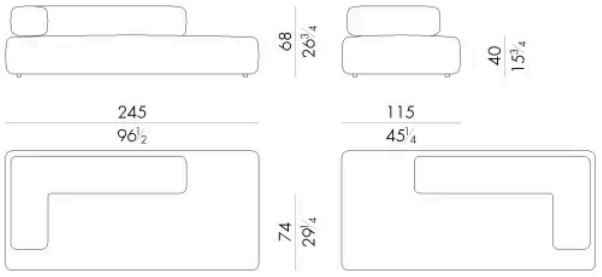

CHOLET.33/SX - CHOLET.33/DX
Modular element

245 W x 115 D x 68 H cm

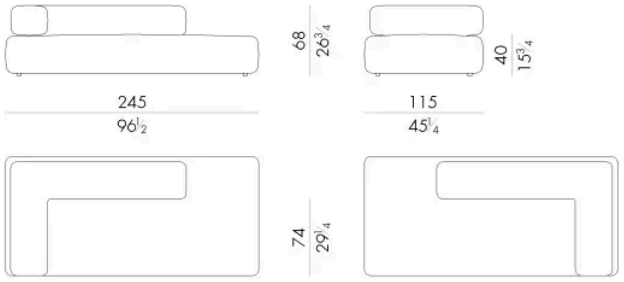

CHOLET.40/SX - CHOLET.40/DX
Modular element

232 W x 150 D x 68 H cm

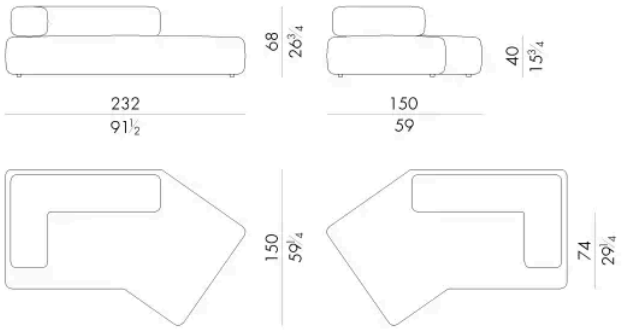

CHOLET.41/SX - CHOLET.41/DX
Modular element

232 W x 150 D x 68 H cm

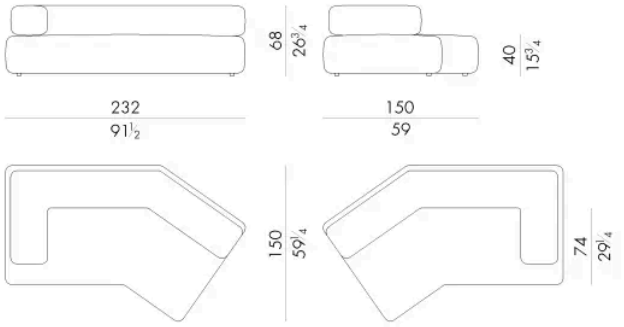

CHOLET.50/SX - CHOLET.50/DX
Modular element

232 W x 150 D x 68 H cm

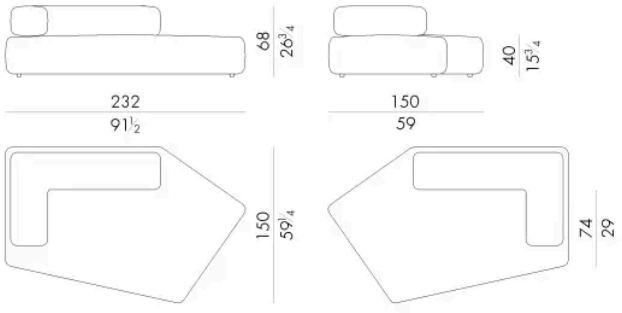

CHOLET.2500/SX - CHOLET.2500/DX
Modular sofa

304 W x 175 D x 68 H cm

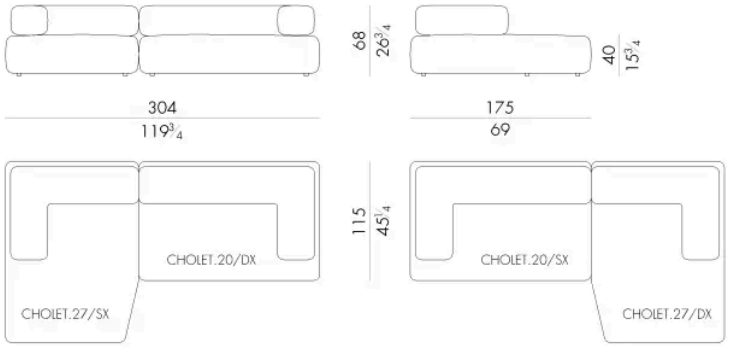

CHOLET.2550/SX - CHOLET.2550/DX

Modular sofa

403 W x 211 D x 68 H cm

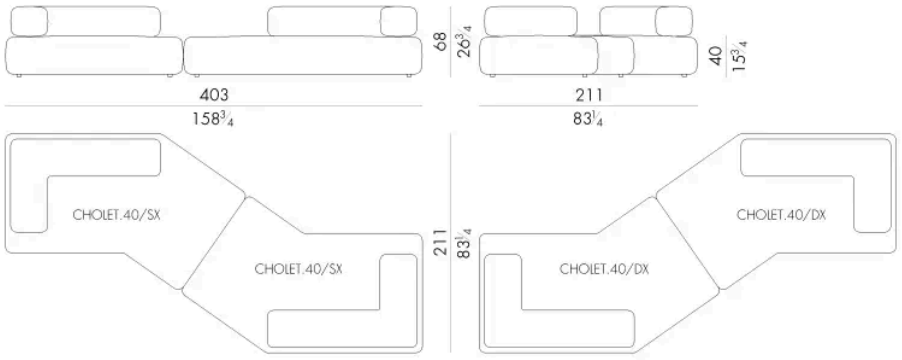

CHOLET.2600/SX - CHOLET.2600/DX

Modular sofa

398 W x 178 D x 68 H cm

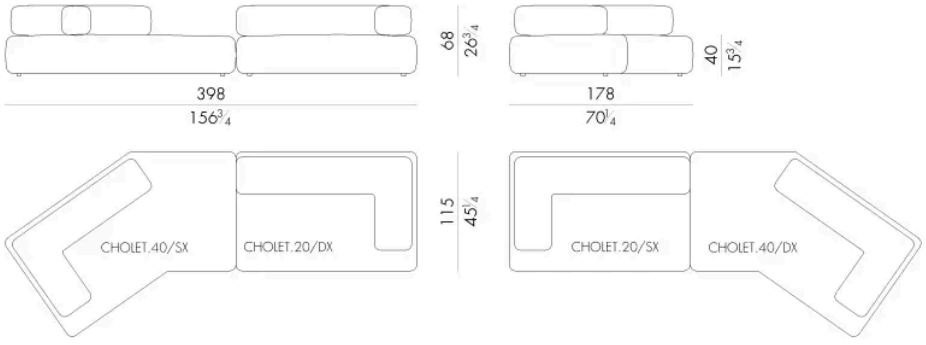

CHOLET.2650/SX - CHOLET.2650/DX

Modular sofa

398 W x 178 D x 68 H cm

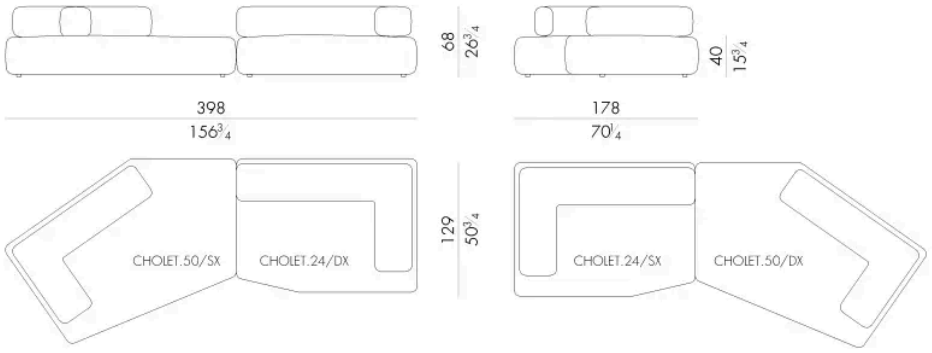

CHOLET.2700

Modular sofa

446 W x 178 D x 68 H cm

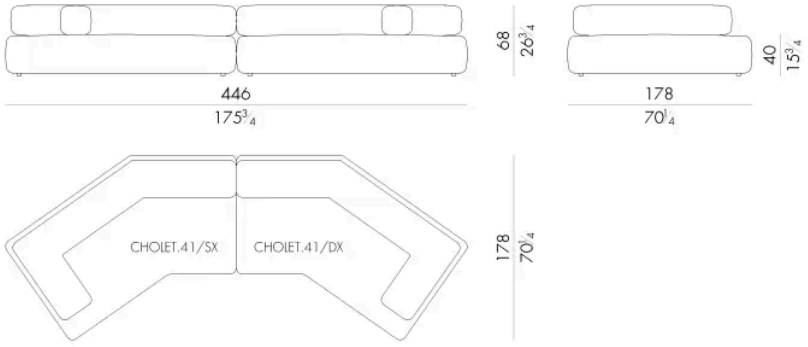

CHOLET.2750/SX - CHOLET.2750/DX
Modular sofa

350 W x 129 D x 68 H cm

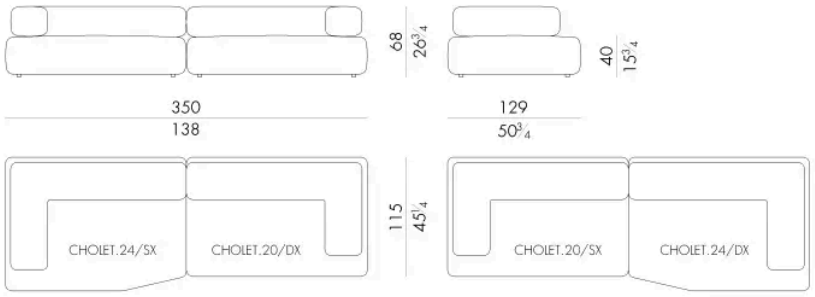

CHOLET.2800/SX - CHOLET.2800/DX
Modular sofa

543 W x 304 D x 68 H cm

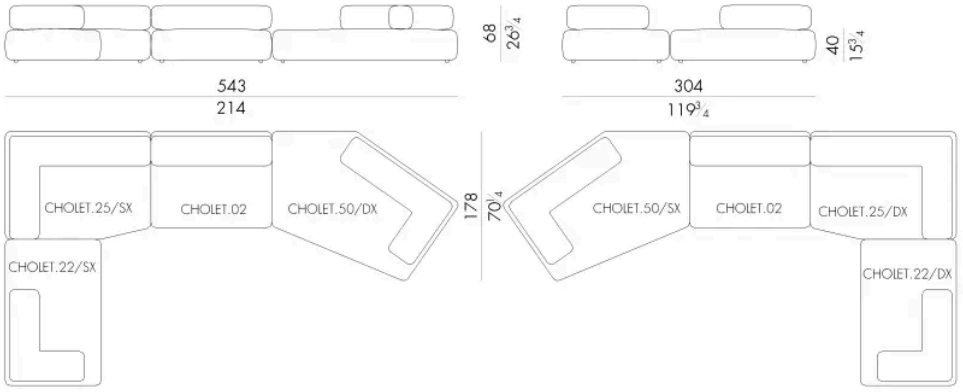

CHOLET.2900/SX - CHOLET.2900/DX
Modular sofa

543 W x 178 D x 68 H cm

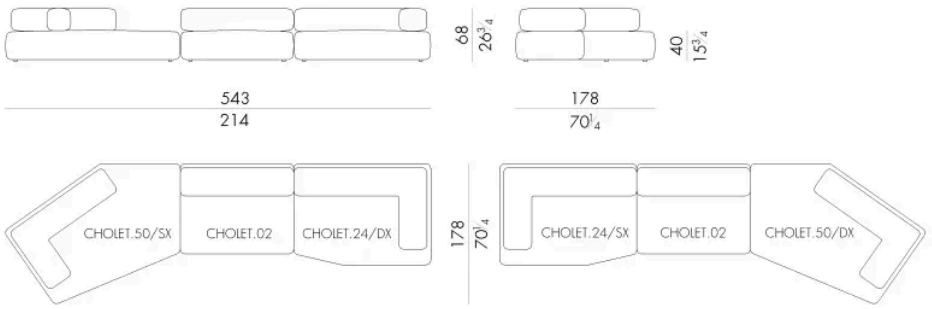

CHOLET.3100
Modular sofa

160 W x 290 D x 68 H cm

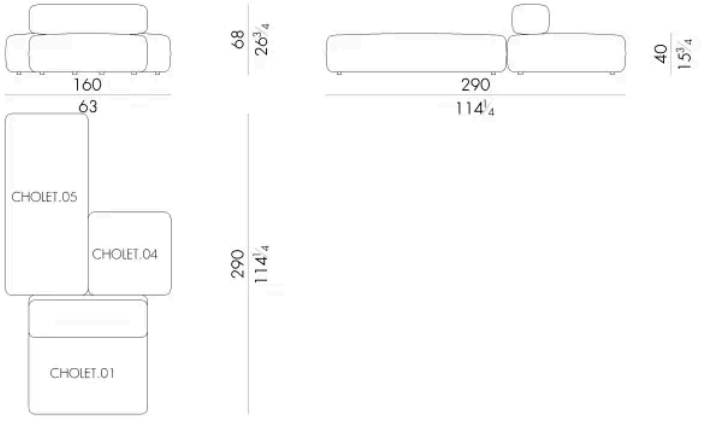

CHOLET.3200
Modular sofa

230 W x 290 D x 68 H cm

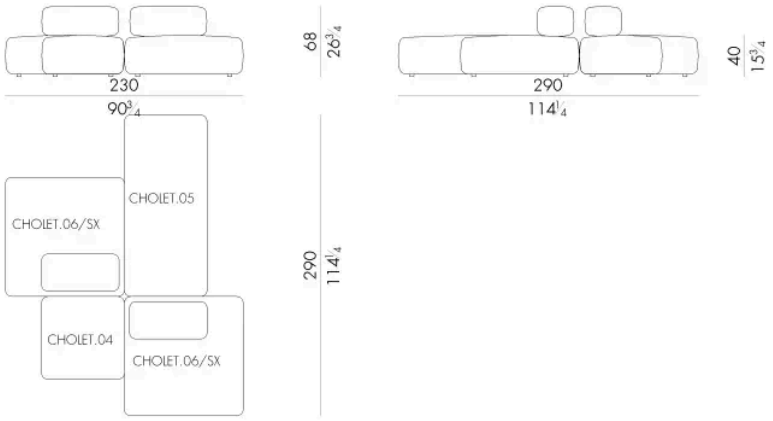

CHOLET.3300
Modular sofa

230 W x 290 D x 68 H cm

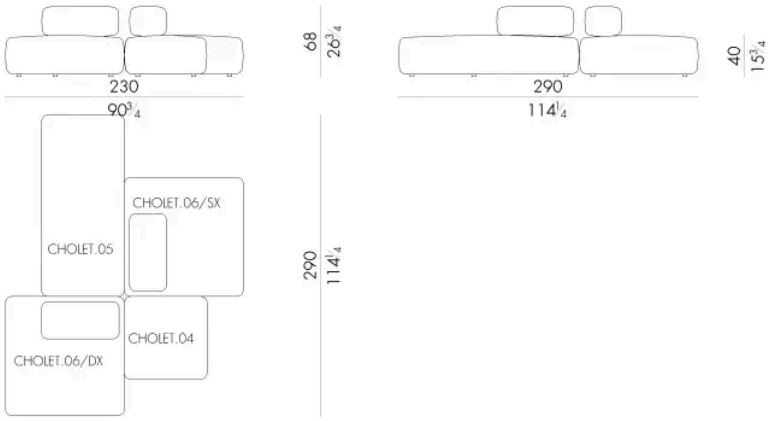

CHOLET.3400
Modular sofa

Generated: 24/11/2026

275 W x 255 D x 68 H cm

